AQ-SAS™

Standard Arc Schemes

The new way of protecting

LV & MV Arc-Flash mitigation solution including backup 50BF(CBFP) function,
Pre-Engineered, Pre-Tested Applications including coamplete wiring diagram & bill of materials

ARCTEQ

RELAYABLE POWER

Arcteq is the global leader in arc flash protection and mitigation solutions. Arcteq products cover all applications ranging from stand-alone units to complete system solutions including LV and MV arc quenching devices.

Arcteq products are protecting power generation, utility, industrial, marine, commercial and institutional power systems in thousands of applications in all continents.

Arcteq arc flash protection products are UL and marine certified.

For complete applications booklet, please visit Arcteq website www.arcteq.fi and download the document via http://arcteq.fi/downloads/aq-100-arc-flash-protection for AQ SAS™ Standard Arc Schemes.

Index

1. Abbreviations

CC – Cable compartment

CB – Circuit Breaker

BB – Busbar

VT – Voltage Transformer

BS – Tie Bus /Tie Circuit Breaker

I> (int.) – Internal overcurrent I> (activated by internal overcurrent module from 3 phase A, B, C &/or G/N)

I> (ext.) – External overcurrent I> (activated from external binary input(s))

Inc. – Energy source Xfmr, or Gen set

Out. – Outgoing Feeder

SS – Scheme Selection

LHS – Left Hand Side

RHS – Right Hand Side

2. Main and feeder breakers

2.1. Main and feeder breakers (AQ101-SS1)

Main benefits

- Full selective trip scheme with fast engineering and simple setting.
- HSO channel 2ms tripping time; Relay contact channel ≤7ms tripping time.
- Appliable in one high circuit breaker arranagement with shipping splits.

	Main Feeder(s)	Out. Feeders
Number of Main Feeders	1	
Number of Out. Feeders		M*
Units Applied	AQ110P	AQ101
Schemes Applied	SS1a	SS1
Number of units Applied	1	M*
Selective Trip	Yes	Yes
Master Trip	Yes	
50BF(CBFP)**	Yes	Yes

*) M ≤ 20, max. number of units can be used in the application.
**)CBFP time setting: 150ms or 100ms.

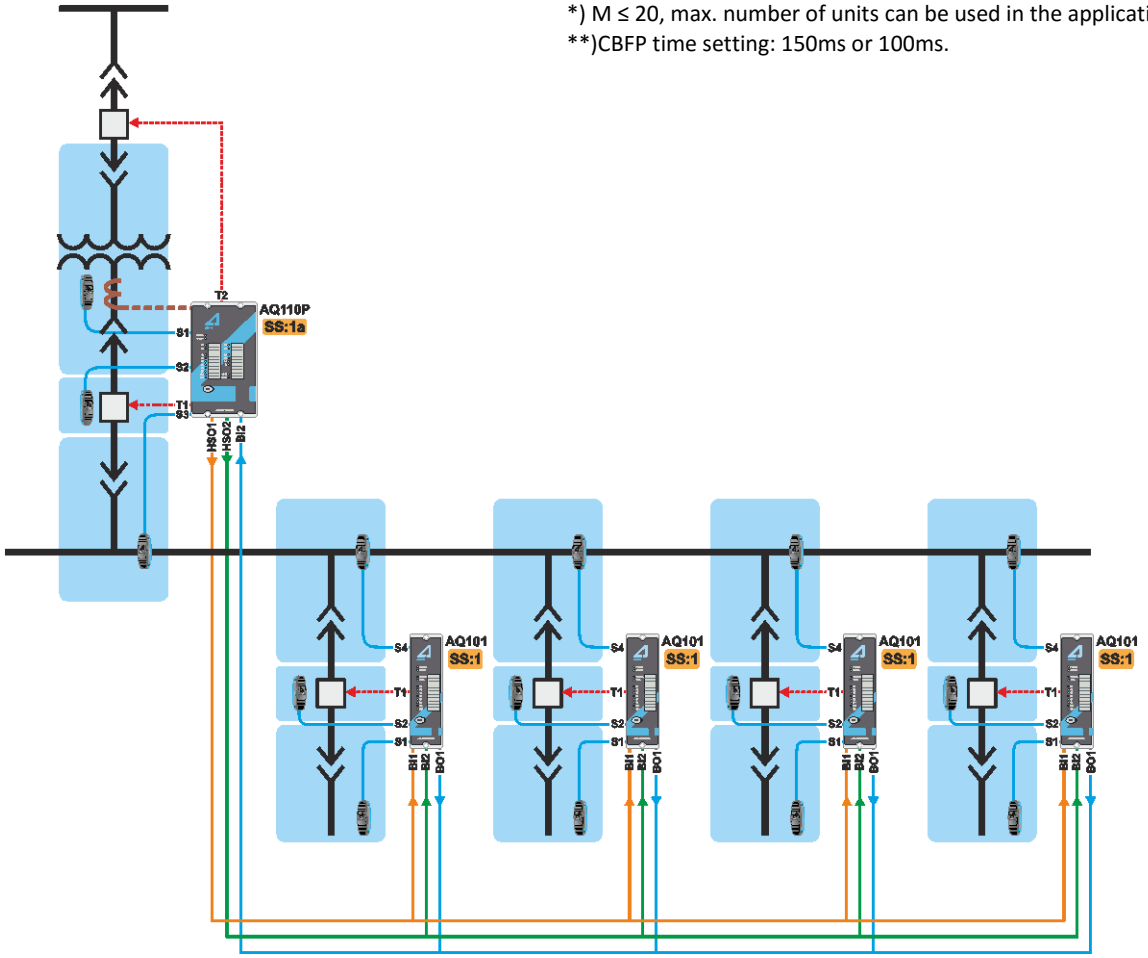

Figure 2-1 Main and feeder breakers (AQ101-SS1)

Trip and I/O description

- AQ110P – SS1a

L>	I> (int.)	I/O Description	Trip Description
	IL, Io	✓ Current inputs Phase IL1, IL2, IL3 and E/F Io. ✓ Measuring current for incomer feeder.	✓ Signal output: HSO1 (I>) to outgoing feeder AQ101-SS1 input BI1.
S1		✓ Sensor channel 1. ✓ Monitoring incoming cable compartment.	✓ Trip criteria: L> only. ✓ Trip outputs: T1 (Main CB), T2 (HVCB), T4 (trip alarm).
S2	IL, Io	✓ Sensor channel 2. ✓ Monitoring incomer circuit breaker compartment.	✓ Trip criteria: I> + L>. ✓ Trip outputs: T1 (Main CB), T2 (HVCB), T3 (not in use), T4 (trip alarm). ✓ Signal output: HSO2 (MT) to outgoing feeder AQ101-SS1 input BI2.
S3/S4	IL, Io	✓ Sensor channel 3/4. ✓ Monitoring busbar compartment.	✓ Trip criteria: I> + L>. ✓ Trip outputs: T1 (Main CB), T3 (not in use), T4 (trip alarm). ✓ Signal output: HSO2 (MT) to outgoing units AQ101-SS1 input BI2.
BI2	IL, Io	✓ Binary input 2.	✓ Trip criteria: I> + L> ✓ Trip outputs: T1 (Main CB), T3 (not in use), T4 (trip alarm). ✓ Signal output: HSO2 (MT) to outgoing feeder AQ101-SS1 input BI2. ✓ Signal input: L> from outgoing feeder AQ101-SS1 output BO1.

Table 2-1: Trip and I/O Description - AQ110P SS1a

L>	I> (int.)	T1	T2	T3	T4	HSO1 (I>)	HSO2 (MT)	BO1
	IL, Io					√		
S1		√	√		√			
S2	IL, Io	√	√	√	√	√	√	
S3	IL, Io	√		√	√	√	√	
S4	IL, Io	√		√	√	√	√	
BI2	IL, Io	√		√	√	√	√	

Table 2-2: Trip and I/O logic - AQ110P SS1a

- AQ101-SS1:

L>	I> (ext.)	I/O Description	Trip Description
	BI1	✓ Binary input 1.	✓ Signal input: BI1 (I>) from Main feeder AQ110P-SS1a output HSO1.
S1	BI1	✓ Sensor channel 1. ✓ Monitoring outgoing cable compartment.	✓ Trip criteria: I> + L>. ✓ Trip output: T1 (outgoing CB), T3 (not in use), T4 (trip alarm). ✓ Signal output: BO1 (L>) to main feeder AQ110P-SS1a BI2 after CBFP setting time.
S2	BI1	✓ Sensor channel 2. ✓ Monitoring outgoing circuit breaker compartment.	✓ Trip criteria: I> + L>. ✓ Trip outputs: T2 (CBFP), T4 (CBFP). ✓ Signal output: BO1 (L>) to main feeder AQ110P-SS1a input BI2. ✓ Signal input: BI2 (MT) from main feeder AQ110P-SS1a output HSO2.
S3/S4	BI1	✓ Sensor channel 3/4. ✓ Monitoring busbar compartment.	✓ Trip criteria: I> + L>. ✓ Trip outputs: T2 (CBFP trip), T4 (CBFP trip alarm). ✓ Signal output: BO1 (L>) to main feeder AQ110P-SS1a input BI2. ✓ Signal input: BI2 (MT) from main feeder AQ110P-SS1a output HSO2.
BI2		✓ Binary input 2.	✓ Trip criteria: I> + L> ✓ Trip outputs: T1 (outgoing CB), T2 (not in use), T3 (not in use), T4 (trip alarm). ✓ Signal inputs: BI2 (MT) from main feeder AQ110P-SS1a output HSO2.

Table 2-3: Trip and I/O Description - AQ101 SS1

L>	I> (ext.)	T1	T2	T3	T4	BO1
	BI1					
S1	BI1	√	√(CBFP)	√	√	√(CBFP)
S2	BI1		√(CBFP)		√(CBFP)	√
S3	BI1		√(CBFP)		√(CBFP)	√
S4	BI1		√(CBFP)		√(CBFP)	√
BI2		√(MT)	√(CBFP)	√(MT)	√(MT)	

Table 2-4: Trip and I/O Logic - AQ101-SS1

Connections

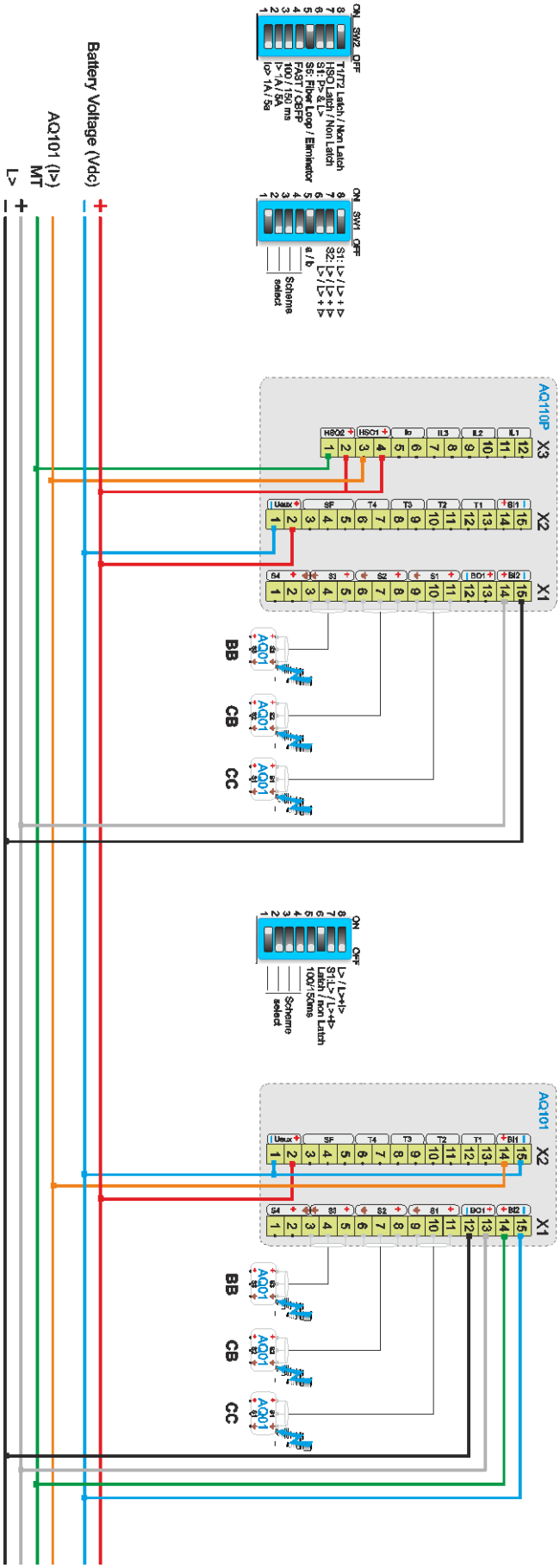

2.2. Main and feeder breakers (AQ101-SS4)

Main benefits

- Full selective trip scheme with fast engineering and simple setting.
- HSO channel 2ms tripping time; Relay contact channel ≤7ms tripping time.
- Appliable in one or two high circuit breaker arranagement with shipping splits.

	Main Feeder(s)	Out. Feeders
Number of Main Feeders	1	
Number of Out. Feeders		M*
Units Applied	AQ110P	AQ101
Schemes Applied	SS1a	SS4
Number of units Applied	1	M*
Selective Trip	Yes	Yes
Master Trip	Yes	
50BF(CBFP)**	Yes	Yes

tion.

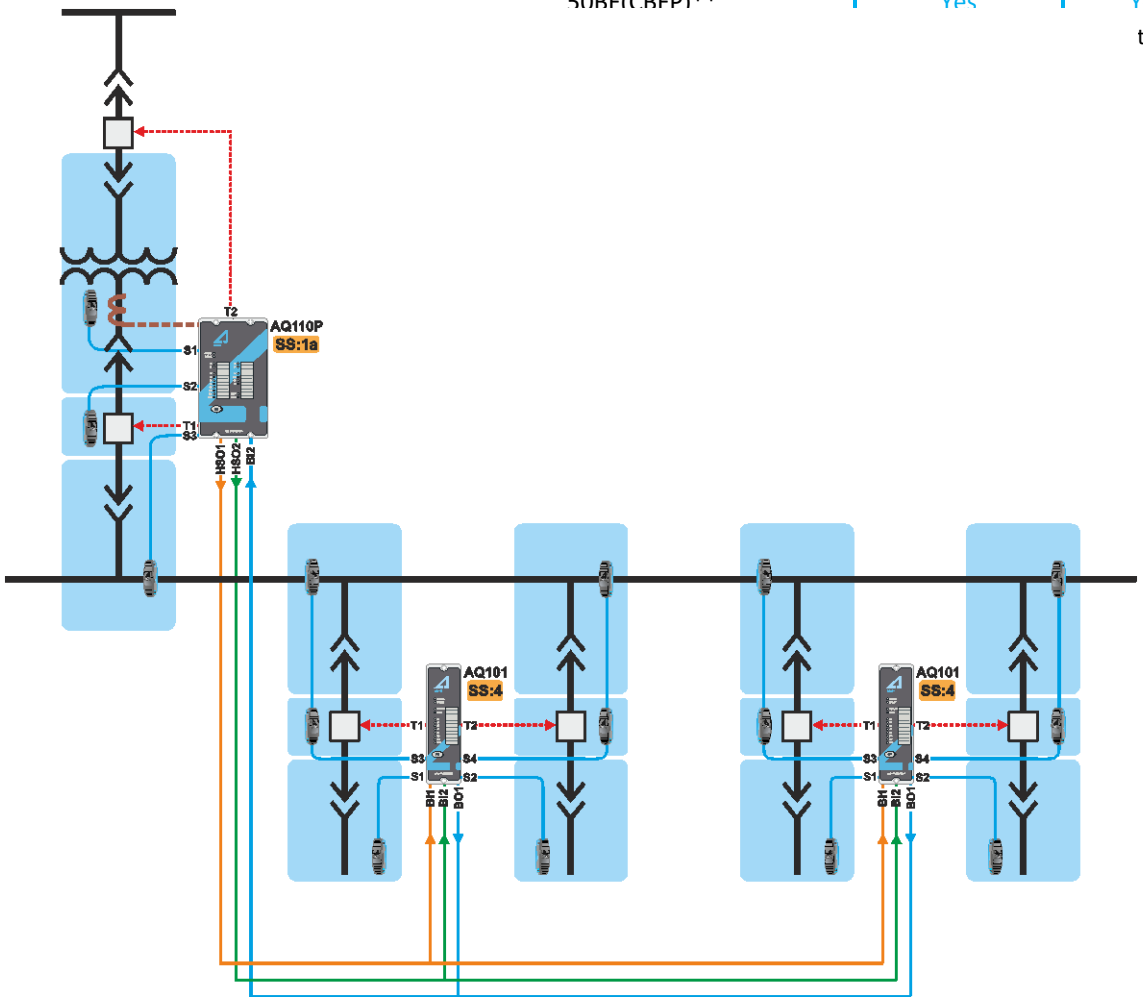

Figure 2-2 Main and feeder breakers (AQ101-SS4)

Trip and I/O description

- AQ110P – SS1a

L>	I> (int.)	T1	T2	T3	T4	HSO1 (I>)	HSO2 (MT)	BO1
	IL, Io					√		
S1		√	√		√			
S2	IL, Io	√	√	√	√	√	√	
S3	IL, Io	√		√	√	√	√	
S4	IL, Io	√		√	√	√	√	
BI2	IL, Io	√		√	√	√	√	

Table 2-5: Trip and I/O logic - AQ110P SS1a

- AQ101 – SS4

L>	I> (ext.)	T1	T2	T3	T4	BO1
	BI1					
S1	BI1	√		√(CBFP)	√	√(CBFP)
S2	BI1		√	√(CBFP)	√	√(CBFP)
S3	BI1			√	√	√
S4	BI1			√	√	√
BI2		√(MT)	√(MT)	√(MT)	√(MT)	

Table 2-6 Trip and I/O Logic - AQ101-SS4

2.3. Main and feeder breakers (AQ101-SS0)

Main benefits

- No feeder trip selectivity, only Master Trip from incomer (most common on LV SWGR or LV MCC).
- HSO channel 2ms tripping time; Relay contact channel ≤7ms tripping time.
- Appliable for one high circuit breaker arranagement with shipping splits.

	Main Feeder(s)	Out. Feeders
Number of Main Feeders	1	
Number of Out. Feeders		M*
Units Applied	AQ110P	AQ101
Schemes Applied	SS1a	SS0
Number of units Applied	1	M*
Selective Trip	No	No
Master Trip	Yes	
50BF(CBFP)**	No	No

*) M ≤ 20, max. number of units can be used in the application.
**)CBFP time setting: 150ms or 100ms.

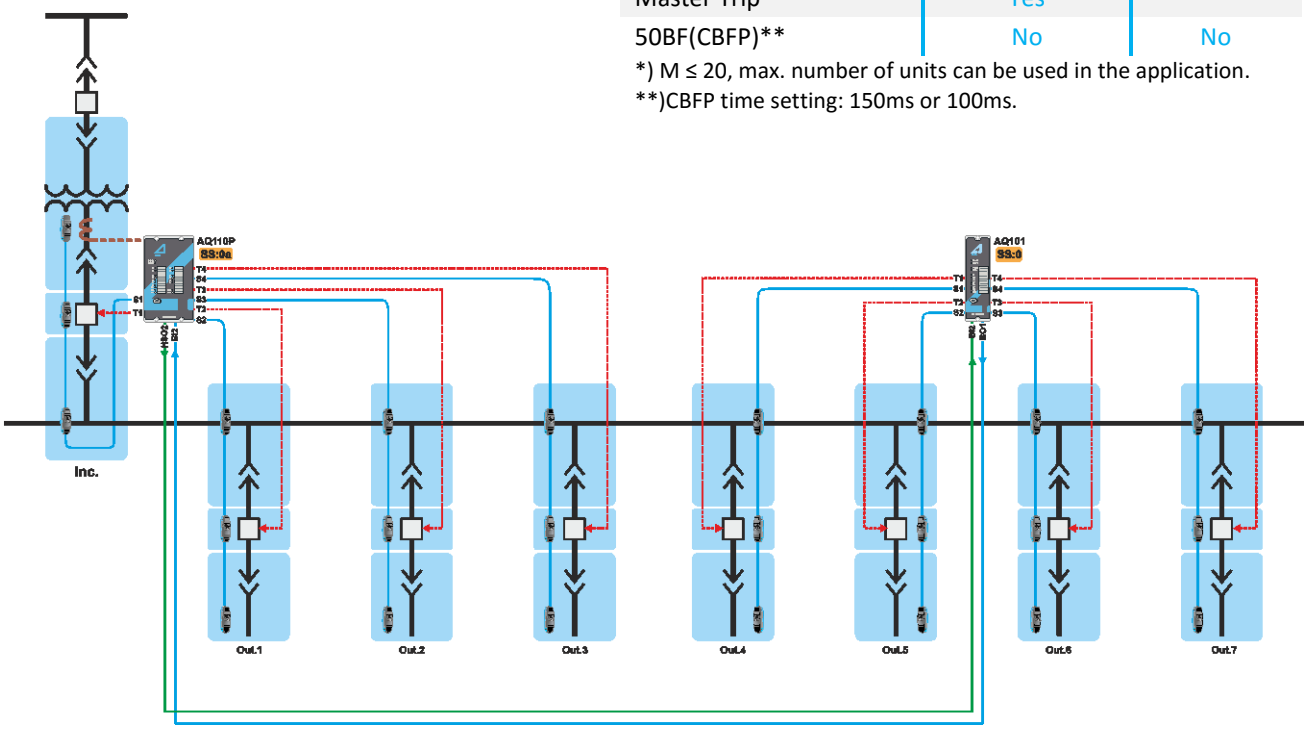

Figure 2-3 Main and feeder breakers (AQ101-SS0)

Trip and I/O description

- AQ110P – SS1a:

L>	I> (int.)	T1	T2	T3	T4	HSO1 (I>)	HSO2 (MT)	BO1
	IL, Io					√		√
S1/S2/S3/S4	IL, Io	√	√	√	√	√	√	√
BI2	IL, Io	√	√	√	√	√	√	√

Table 2-7: Trip and I/O logic - AQ110P SS0a

- AQ110P – SS0:

L>	T1	T2	T3	T4	BO1
S1/S2/S3/S4	√	√	√	√	√
BI2	√(MT)	√(MT)	√(MT)	√(MT)	

Table 2-8: Trip and I/O Logic - AQ101-SS0

3. Multiple mains and feeders

3.1. Multiple mains and feeders (AQ110P-SS4a)

Main benefits

- Full selective trip scheme with fast engineering and simple setting.
- HSO channel 2ms tripping time; Relay contact channel ≤7ms tripping time.
- Appliable in one high circuit breaker arranagement with shipping splits.

	Main Feeder(s)	Out. Feeders
Number of Main Feeders	N**	
Number of Out. Feeders		M*
Units Applied	AQ110P	AQ101
Schemes Applied	SS2a, SS4a	SS1
Number of units Applied	N**	M*
Selective Trip	Yes	Yes
Master Trip	Yes	
50BF(CBFP)***	Yes	Yes

*) M ≤ 20, max. number of units can be used in the application.
**) N = 20-M, number of AQ110 units can be used in incomer feeders.
***)CBFP time setting: 150ms or 100ms.

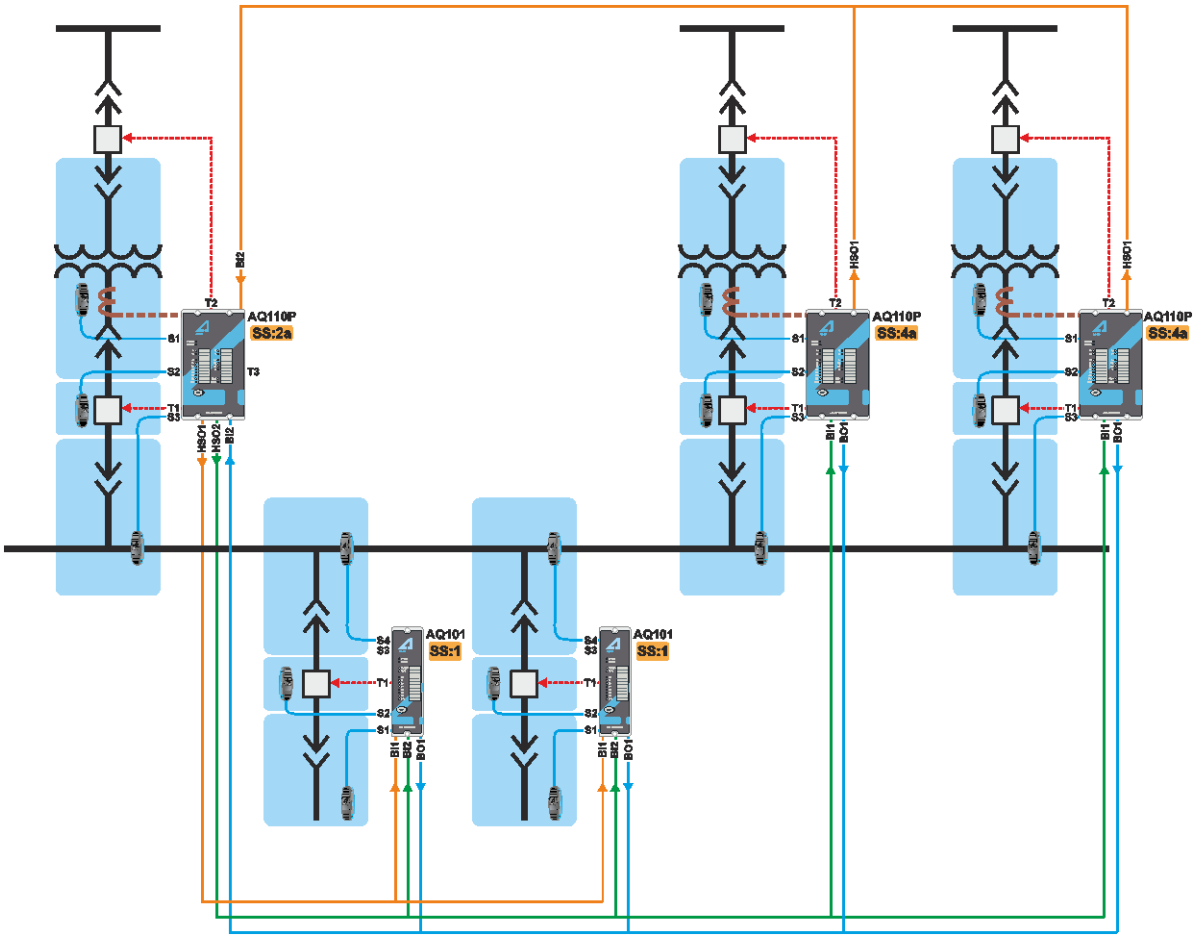

Figure 3-1: Multi Incomers without Tie Breaker.

Trip and I/O description

- AQ110P-SS2a:

L>	I> (ext.)	I> (int.)	T1	T2	T3	T4	HSO1 (I>)	HSO2 (MT)	BO1
		IL, Io					√		√
	BI1						√		
S1			√	√		√			
S2		IL, Io	√	√	√	√	√	√	√
	BI1						√		
S3		IL, Io	√		√	√	√	√	√
	BI1						√		
S4		IL, Io	√		√	√	√	√	√
	BI1								
BI2		IL, Io	√		√	√	√	√	√
	BI1								

Table 3-1: Trip and I/O logic - AQ110P SS2a

- AQ110P-SS4a:

L>	I> (ext.)	I> (int.)	T1	T2	T3	T4	HSO1 (I>)	HSO2 (MT)	BO1(L>)
		IL, Io					√		
S1			√	√		√			√(CBFP)
S2	BI2	IL, Io	√	√	√	√	√		√
S3/S4	BI2	IL, Io	√		√	√	√		√
BI1			√(MT)	√ (CBFP)	√(MT)	√(MT)			

Table 3-2: Trip and I/O Logic - AQ110P SS4a

- AQ101-SS1:

L>	I> (ext.)	T1	T2	T3	T4	BO1
	BI1					
S1	BI1	√	√(CBFP)	√	√	√(CBFP)
S2	BI1		√(CBFP)		√(CBFP)	√
S3	BI1		√(CBFP)		√(CBFP)	√
S4	BI1		√(CBFP)		√(CBFP)	√
BI2		√(MT)	√(MT)	√(MT)	√(MT)	

Table 3-3: Trip and I/O Logic - AQ101 SS1

4. Main Tie Main

4.1. Main Tie Main (AQ101-SS1)

Main benefits

- Full selective trip scheme with fast engineering and simple setting.
- HSO channel 2ms tripping time; Relay contact channel ≤7ms tripping time.
- Commonly used in LV or MV multiple utilit sources or utility & backup Gen set, with shipping splits in mind as well as ATS scheme if applied.

	Main Feeder(s)	Out. Feeders
Number of Main Feeders	2	
Number of Out. Feeders		M*
Units Applied	AQ110P	AQ101
Schemes Applied	SS2a	SS1
Number of units Applied	2	M*
Selective Trip	Yes	Yes
Master Trip	Yes	
50BF (CBFP)**	Yes	Yes

*) M ≤ 20, max. number of units can be used per sectional busbar in the application.
**)CBFP time setting: 150ms or 100ms.

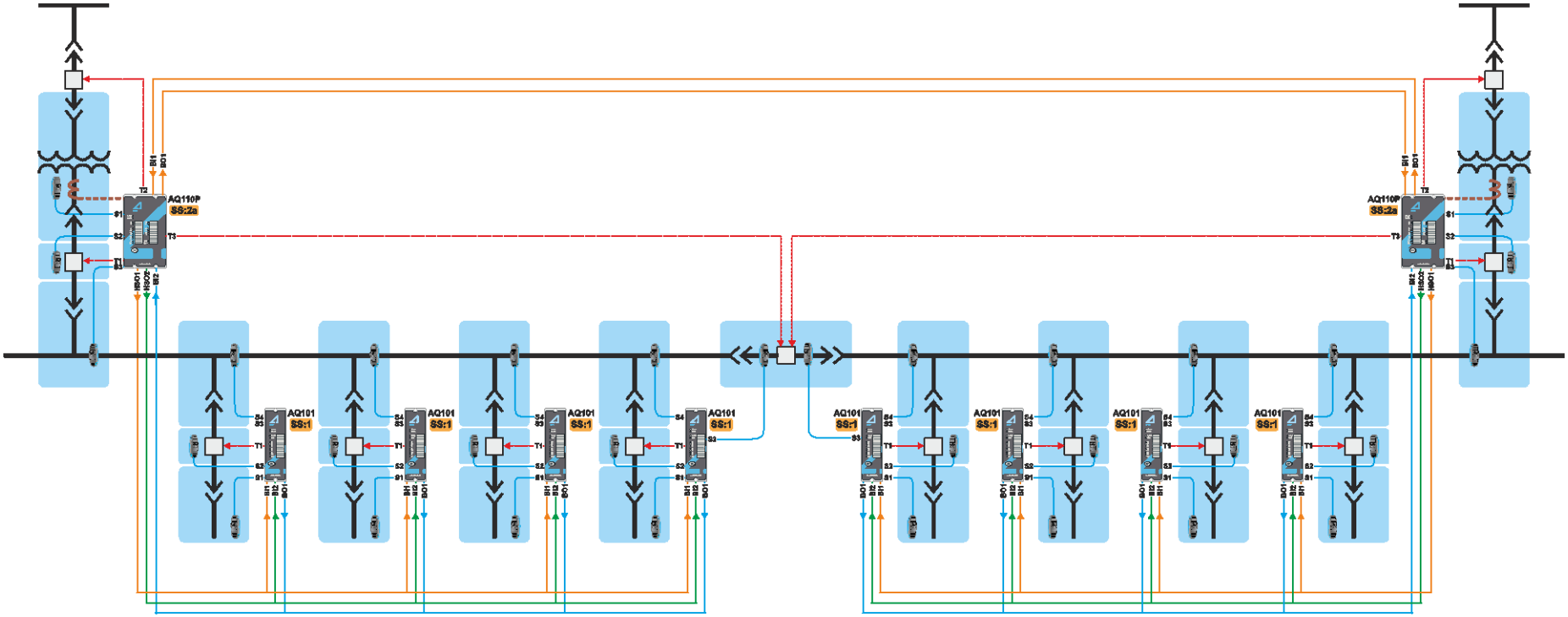

Figure 4-2 Main Tie Main (AQ101-SS1).

Trip and I/O Description

- AQ110P – SS2a:

L>	I> (ext.)	I> (int.)	T1	T2	T3	T4	HSO1 (I>)	HSO2 (MT)	BO1
		IL, Io					√		√
	BI1						√		
S1			√	√		√			
S2		IL, Io	√	√	√	√	√	√	√
	BI1						√		
S3		IL, Io	√		√	√	√	√	√
	BI1						√		
S4		IL, Io	√		√	√	√	√	√
	BI1								
BI2		IL, Io	√		√	√	√	√	√
	BI1								

Table 4-4: Trip and I/O logic - AQ110P SS2a

- AQ101 – SS1:

L>	I> (ext.)	T1	T2	T3	T4	BO1
	BI1					
S1	BI1	√	√(CBFP)	√	√	√(CBFP)
S2	BI1		√(CBFP)		√(CBFP)	√
S3	BI1		√(CBFP)		√(CBFP)	√
S4	BI1		√(CBFP)		√(CBFP)	√
BI2		√(MT)	√(CBFP)	√(MT)	√(MT)	

Table 4-5: Trip and I/O Logic - AQ101-SS1

4.2. Main Tie Main (AQ101-SS4)

Main benefits

- Full selective trip scheme with fast engineering and simple setting.
- HSO channel 2ms tripping time; Relay contact channel ≤7ms tripping time.
- Commonly used in LV or MV multiple utilit sources or utility & backup Gen set, with shipping splits in mind as well as ATS scheme if applied.

	Main Feeder(s)	Out. Feeders
Number of Main Feeders	2	
Number of Out. Feeders		M*
Units Applied	AQ110P	AQ101
Schemes Applied	SS2a	SS4
Number of units Applied	2	M*
Selective Trip	Yes	Yes
Master Trip	Yes	
50BF (CBFP)**	Yes	Yes

*) M ≤ 20, max. number of units can be used per sectional busbar in the application.
**)CBFP time setting: 150ms or 100ms

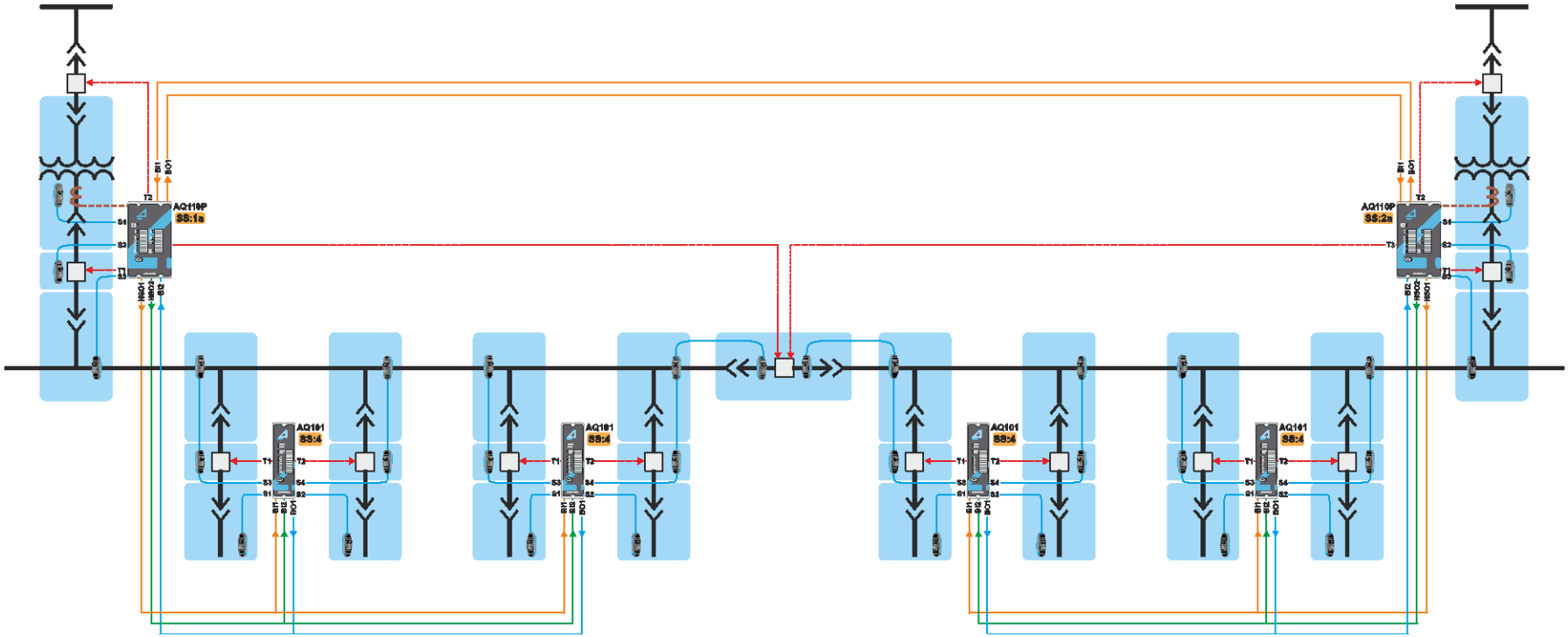

Figure 3-3 Main Tie Main (AQ101-SS4).

Trip and I/O Description

- AQ110P – SS2a:

L>	I> (ext.)	I> (int.)	T1	T2	T3	T4	HSO1 (I>)	HSO2 (MT)	BO1
		IL, Io					√		√
	BI1						√		
S1			√	√		√			
S2		IL, Io	√	√	√	√	√	√	√
	BI1						√		
S3		IL, Io	√		√	√	√	√	√
	BI1						√		
S4		IL, Io	√		√	√	√	√	√
	BI1								
BI2		IL, Io	√		√	√	√	√	√
	BI1								

Table 4-3: Trip and I/O logic - AQ110P SS2a

- AQ101 – SS1:

L>	I> (ext.)	T1	T2	T3	T4	BO1
	BI1					
S1	BI1	√		√(CBFP)	√	√(CBFP)
S2	BI1		√	√(CBFP)	√	√(CBFP)
S3	BI1			√	√	√
S4	BI1			√	√	√
BI2		√(MT)	√(MT)	√(MT)	√(MT)	

Table 4-4: Trip and I/O Logic - AQ101-SS4

4.3. Main Tie Main (AQ101-SS0)

Main benefits

- No feeder trip selectivity, only Master Trip from incomer.
- HSO channel 2ms tripping time; Relay contact channel ≤7ms tripping time.
- Commonly used in LV or MV multiple utilit sources or utility & backup Gen set, with shipping splits in mind as well as ATS scheme if applied.

	Main Feeder(s)	Out. Feeders
Number of Main Feeders	2	
Number of Out. Feeders		M*
Units Applied	AQ110P	AQ101
Schemes Applied	SS2a	SS0
Number of units Applied	2	M*
Selective Trip	Yes	No
Master Trip	Yes	
50BF (CBFP)**	Yes	No

*) M ≤ 20, max. number of units can be used per sectional busbar in the application.
**)CBFP time setting: 150ms or 100ms

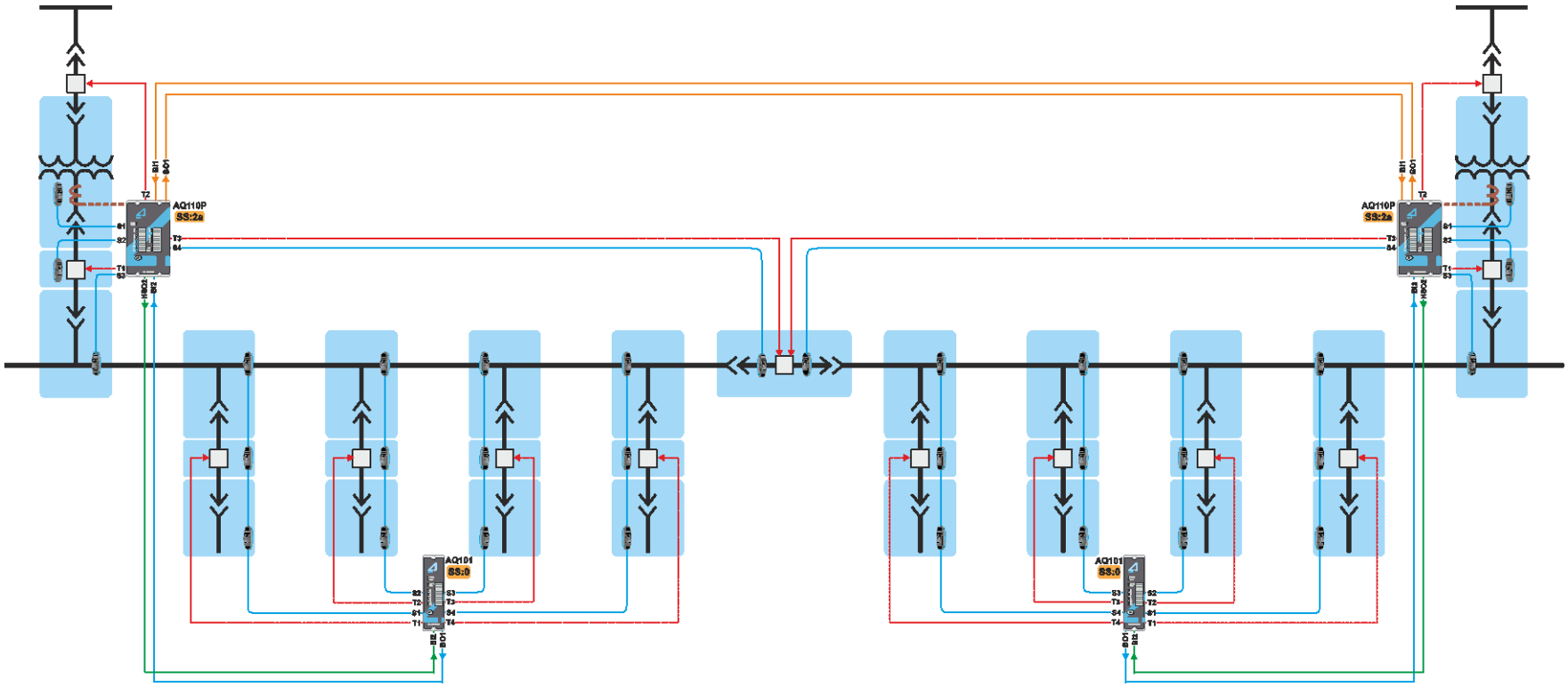

Figure 3-3 Main Tie Main (AQ101-SS0).

Trip and I/O Description

- AQ110P – SS2a:

L>	I> (ext.)	I> (int.)	T1	T2	T3	T4	HSO1 (I>)	HSO2 (MT)	BO1
		IL, Io					√		√
	BI1						√		
S1			√	√		√			
S2		IL, Io	√	√	√	√	√	√	√
	BI1						√		
S3		IL, Io	√		√	√	√	√	√
	BI1						√		
S4		IL, Io	√		√	√	√	√	√
	BI1								
BI2		IL, Io	√		√	√	√	√	√
	BI1								

Table 4-6: Trip and I/O logic - AQ110P SS2a

*): HSO1 (I>) is not in use.

- AQ101 – SS0:

L>	T1	T2	T3	T4	BO1
S1	√	√	√	√	√
S2	√	√	√	√	√
S3	√	√	√	√	√
S4	√	√	√	√	√
BI2	√(MT)	√(MT)	√(MT)	√(MT)	

Table 4-7: Trip and I/O Logic - AQ101-SS0

5. Multiple Mains and Bus Tie Breaker

5.1. Multiple mains and bus tie breaker (AQ110P- SS7a)

Main benefits

- Full selective trip scheme with fast engineering and simple setting.
- HSO channel 2ms tripping time; Relay contact channel ≤7ms tripping time.
- Commonly used in LV or MV multiple utilit sources or utility & backup Gen set, with shipping splits in mind as well as ATS scheme if applied.

	Main Feeder(s)	Out. Feeders
Number of Main Feeders	N**	
Number of Out. Feeders		M*
Units Applied	AQ110P	AQ101
Schemes Applied	SS2a	SS1
Number of units Applied	N**	M*
Selective Trip	Yes	Yes
Master Trip	Yes	
50BF (CBFP)***	Yes	Yes

*) M ≤ 20, max. number of units can be used per sectional busbar in the application.
**) N = 20-M, number of AQ110 units can be used in per sectional busbar.
***)CBFP time setting: 150ms or 100ms

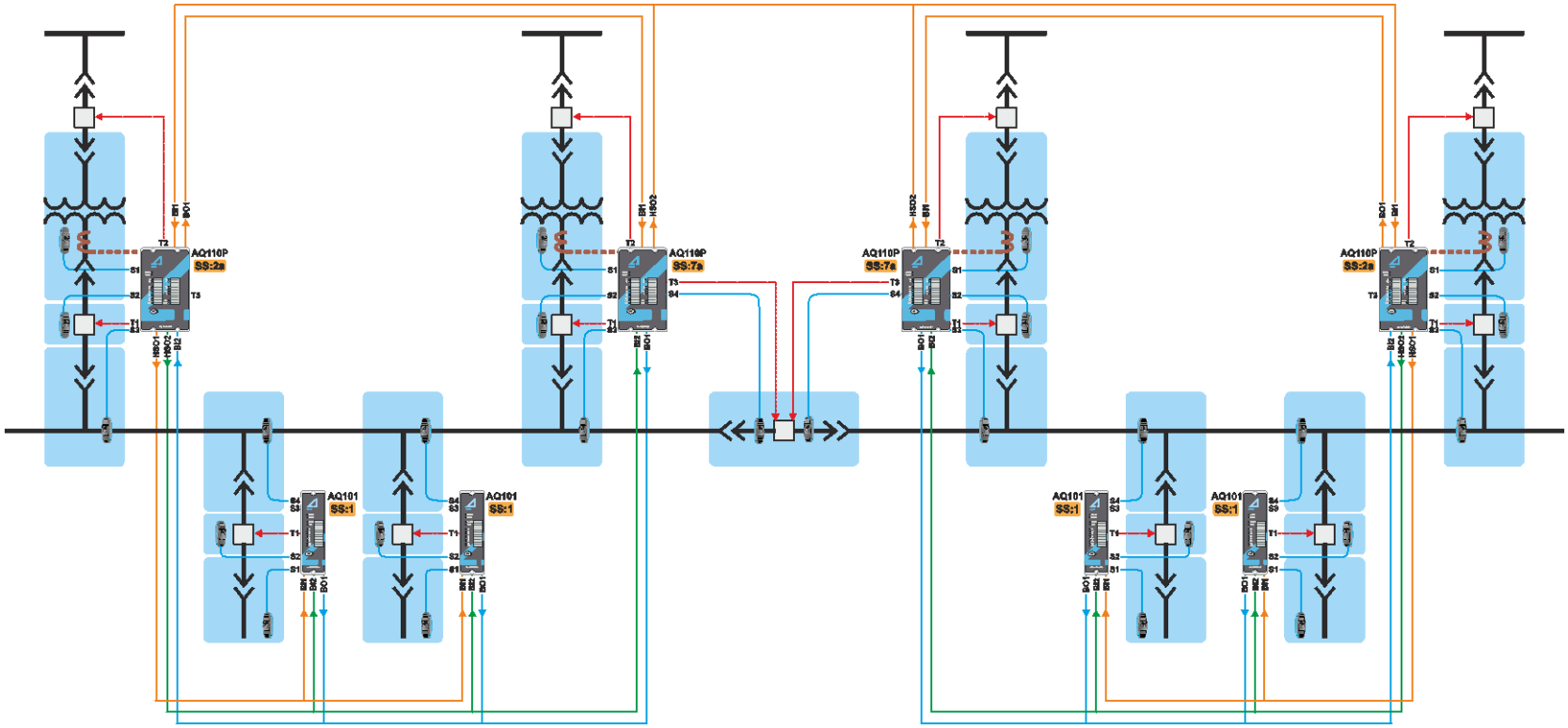

Figure 5-1. Multiple mains and bus tie breaker (AQ110P-SS7a).

Trip and I/O Description

- AQ110P – SS2a (LHS):

L>	I> (int.)	I> (ext. LHS)	I> (ext. RHS)	T1	T2	T3	T4	HSO1 (I>)	HSO2 (MT)	BO1
	IL, Io							√		√
		BI1						√		
			BI1					√		
S1				√	√		√			
S2	IL, Io			√	√	√	√	√	√	√
		BI1		√	√	√	√	√	√	
			BI1	√	√	√	√	√	√	
S3	IL, Io			√		√	√	√	√	√
		BI1		√		√	√	√	√	
			BI1	√		√	√	√	√	
S4	IL, Io			√		√	√	√	√	√
		BI1		√		√	√	√	√	
			BI1	√		√	√	√	√	
BI2	IL, Io			√		√	√	√	√	√
		BI1		√		√	√	√	√	
			BI1	√		√	√	√	√	

Table 5-8: Trip and I/O logic - AQ110P SS2a (LHS)

- AQ110P – SS7a (LHS):

L>	I> (ext. LHS)	I> (int.)	T1	T2	T3	T4	HSO1 (int. I>)	HSO2 (ext. I>)	BO1 (L>)
		IL, Io					√	√	
	BI1							√	
S1			√	√		√			
S2		IL, Io	√	√	√	√	√	√	√
	BI1		√	√	√	√		√	√
S3		IL, Io	√		√	√	√	√	√
	BI1		√		√	√		√	√
S4		IL, Io	√		√	√	√	√	√
	BI1		√		√	√		√	√
BI2		IL, Io	√ (MT)		√ (MT)	√ (MT)	√	√	
	BI1							√	

Table 5-9: Trip and I/O Logic - AQ110P SS7a (LHS)

- AQ101-SS1 (LHS):

L>	I> (ext.)	T1	T2	T3	T4	BO1
	BI1					
S1	BI1	√	√(CBFP)	√	√	√(CBFP)
S2	BI1		√(CBFP)		√(CBFP)	√
S3	BI1		√(CBFP)		√(CBFP)	√
S4	BI1		√(CBFP)		√(CBFP)	√
BI2		√(MT)	√(CBFP)	√(MT)	√(MT)	

Table 5-10: Trip and I/O Logic - AQ101-SS1 (LHS)

- AQ110P – SS2a (RHS):

L>	I> (int.)	I> (ext. RHS)	I> (ext. LHS)	T1	T2	T3	T4	HSO1(I>)	HSO2 (MT)	BO1
	IL, Io							√		√
		BI1						√		
			BI1					√		
S1				√	√		√			
S2	IL, Io			√	√	√	√	√	√	√
		BI1		√	√	√	√	√	√	
			BI1	√	√	√	√	√	√	
S3	IL, Io			√		√	√	√	√	√
		BI1		√		√	√	√	√	
			BI1	√		√	√	√	√	
S4	IL, Io			√		√	√	√	√	√
		BI1		√		√	√	√	√	
			BI1	√		√	√	√	√	
BI2	IL, Io			√		√	√	√	√	√
		BI1		√		√	√	√	√	
			BI1	√		√	√	√	√	

Table 5-11: Trip and I/O logic - AQ110P SS2a (RHS)

- AQ110P – SS7a (LHS):

L>	I> (ext. RHS)	I> (int.)	T1	T2	T3	T4	HSO1 (int. I>)	HSO2 (ext. I>)	BO1 (L>)
		IL, Io					√	√	
	BI1							√	
S1			√	√		√			
S2		IL, Io	√	√	√	√	√	√	√
	BI1		√	√	√	√		√	√
S3		IL, Io	√		√	√	√	√	√
	BI1		√		√	√		√	√
S4		IL, Io	√		√	√	√	√	√
	BI1		√		√	√		√	√
BI2		IL, Io	√ (MT)		√ (MT)	√ (MT)	√	√	
	BI1							√	

Table 5-12: Trip and I/O Logic - AQ110P SS7a (RHS)

- AQ101-SS1 (LHS):

L>	I> (ext.)	T1	T2	T3	T4	BO1
	BI1					
S1	BI1	√	√(CBFP)	√	√	√(CBFP)
S2	BI1		√(CBFP)		√(CBFP)	√
S3	BI1		√(CBFP)		√(CBFP)	√
S4	BI1		√(CBFP)		√(CBFP)	√
BI2		√(MT)	√(CBFP)	√(MT)	√(MT)	

Table 5-13: Trip and I/O Logic - AQ101-SS1 (RHS)

AQ-SAS™ Instruction Booklet Version 1.5 ANSI

ARCTEQ

www.arcteq.fi