ARCTEQ®
PART OF ENSTO GROUP

AQ-102

Arc flash protection device

Instruction manual

Table of contents

Disclaimer

Please read these instructions carefully before using the equipment or taking any other actions with respect to the equipment. Only trained and qualified persons are allowed to perform installation, operation, service or maintenance of the equipment. Such qualified persons have the responsibility to take all appropriate measures, including e.g. use of authentication, encryption, anti-virus programs, safe switching programs etc. necessary to ensure a safe and secure environment and usability of the equipment. The warranty granted to the equipment remains in force only provided that the instructions contained in this document have been strictly complied with.

Nothing contained in this document shall increase the liability or extend the warranty obligations of the manufacturer Arcteq Relays Ltd. The manufacturer expressly disclaims any and all liability for any damages and/or losses caused due to a failure to comply with the instructions contained herein or caused by persons who do not fulfil the aforementioned requirements. Furthermore, the manufacturer shall not be liable for possible errors in this document.

Please note that you must always comply with applicable local legislation and regulations. The manufacturer gives no warranties that the content of this document is in all respects in line with local laws and regulations and assumes no liability for such possible deviations.

You are advised to notify the manufacturer in case you become aware of any errors in this document or of defects in the equipment.

The manufacturer reserves the right to update or amend this document at any time.

Copyright

1 Document information

Table. 1 - 1. History of Revision 1.

Revision	1.00
Date	October 2011
Changes	- The first revision of the manual.
Revision	1.01
Date	October 2011
Changes	- Product image added.
Revision	1.02
Date	November 2011
Changes	- Chapter 3.3.1 revised: e.g. a DIP switch forward-and-back feature is added to system configuration. - Chapter 3.3.5 revised: e.g. the scheme selection by DIP switching is added. One selective and one non-selective scheme added.
Revision	1.03
Date	May 2019
Changes	- Input connection check added. - Technical data updated.

Table. 1 - 2. History of Revision 2.

Revision	2.00
Date	October 2020
Changes	- Content completely rewritten to improve grammar and readability. - The "Available logic schemes" chapter updated. - The AQ-02 point sensor chapter added to the "Arc sensors" chapter, and AQ-02's technical data added to the "Technical data" chapter. - The sensor–unit type dependency list updated. - The "Connecting sensors" chapter added. - All technical data checked and updated where necessary. - Ordering information updated. - Images updated where necessary.
Revision	2.01
Date	November 2021
Changes	- Cut-out panel installation image added. - Dimension measurements updated in images and in technical data. - Wiring diagram, simplified block diagram, DIP switch diagram & application image(s) updated. - Push button image added. - End covering description added to AQ-07, removed from AQ-08. - Cut-and-slice text removed from all fiber descriptions. - Connections image updated. - The test plan example updated. - All table layouts unified in "Technical data". - The IP classification of point sensors updated. - The AWG value of sensor cable corrected. - "Disturbance tests" table reformatted. - Order code images updated. - The number for Arcteq's technical support added to the reference information.
Revision	2.02
Date	January 2023

Changes	- Updated the Arcteq logo on the cover. - Updated the distance between the flash and the sensor in the "Testing the operation time" chapter. - Unified terminology used througout the manual (e.g. unit and device means the same thing. Now all AQ 100 series relays are called "devices"). - Improved many existing drawings. - Rearranged topics into a more logical order. - Added connection drawings to input and output descriptions under "Connections" chapter. - Added hyperlinks to chapters. (e.g. "See Device features chapter for more information") - Listed more features in Device features chapter. - T3 is now considered to be normally open by default and normally closed as an order option. - Added information about binary output pulse messages. - Many tables have been simplified and made easier to read. - Scheme matrixes and simplified logic diagrams have been made more detailed in "Available schemes" chapter.

2 Abbreviations

AQD – arc quenching device

BI – binary input

BO – binary output

CB – circuit breaker

CBFP – circuit breaker failure protection

CT – current transformer

EPROM – erasable, programmable read-only memory

HSO – high-speed output

LED – light emitting diode

LV – low-voltage

MV – medium-voltage

NC – normally closed

NO – normally open

PCB – printed circuit board

RF – radio frequency

Rx – receiver

SAS – standard arc scheme

SF – system failure

Tx – transceiver

µP - microprocessor

3 General

The AQ-102 is a sophisticated microprocessor-based arc flash protection device with fiber loops sensor channels. The device is designed to minimize the damage caused by an arc fault. This is done by tripping the circuit breaker which supplies current to the fault when fiber loops detect arc light.

The device includes a complete system self-supervision functionality which provides the highest level of dependability as it continuously monitors all internal system functions as well as all external connections.

Figure. 3 - 1. Arc protection device AQ-102.

The AQ-102 is designed according to the latest protection relay standards and is therefore suitable for installations in rough environments. These include utilities and power plants (both traditional and renewable), various heavy industry applications (off-shore, marine, oil, gas, mining, steel, etc.) as well as commercial and institutional electrical systems. AQ-102 is suitable for MV and LV switchgears as well as for motor control center applications in both new and retrofitted installations.

4 Device features

AQ-102 is an arc flash protection device which can be applied to a variety of applications. It can be used on its own as a stand-alone device, or it can be a part of a more complex arc protection system by using binary inputs and outputs to connect multiple AQ 100 series devices together.

The following list presents the main features of the device:

- 92…265 V AC/DC auxiliary power supply or 18…72 V DC auxiliary power supply (optional)
- three (3) fiber loop channels for arc flash detection
- one (1) fiber connector for AQ-1000 arc quenching device control (optional)
- two (2) binary inputs with nominal operation voltage of 24, 110, or 220 V DC
- four (4) trip relay outputs
- one (1) binary output (with internal 24 V DC power supply)
- one (1) system failure output (change-over)
- eleven (11) indication LEDs
- eight (8) DIP switches for logic configuration
- one (1) push button.

5 Connections

The figure below depicts the connections of AQ-102. Please note that the SF relay is in the de-energized position.

Figure. 5 - 2. Rear terminals of AQ-102.

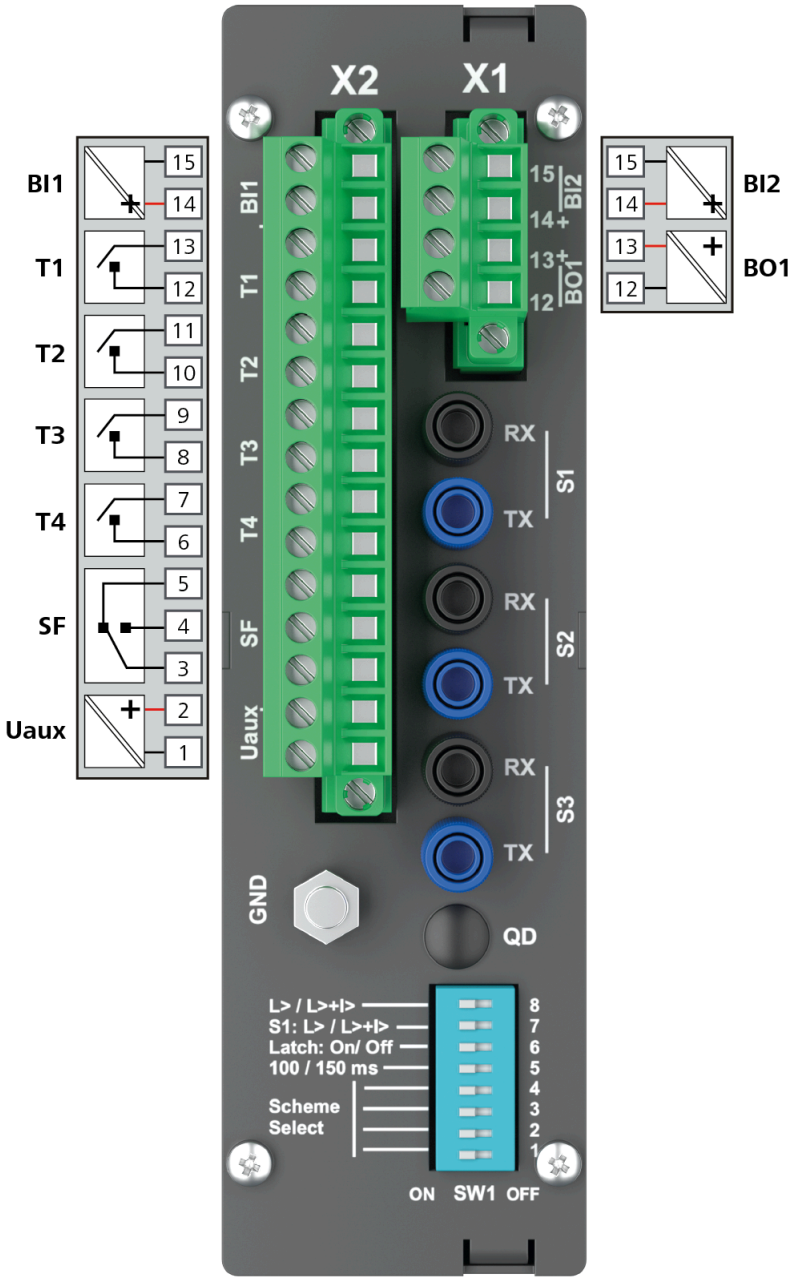

5.1 Simplified block diagram

The figure below presents the main components of the AQ-102 device.

Figure. 5.1 - 3. Simplified block diagram of AQ-102.

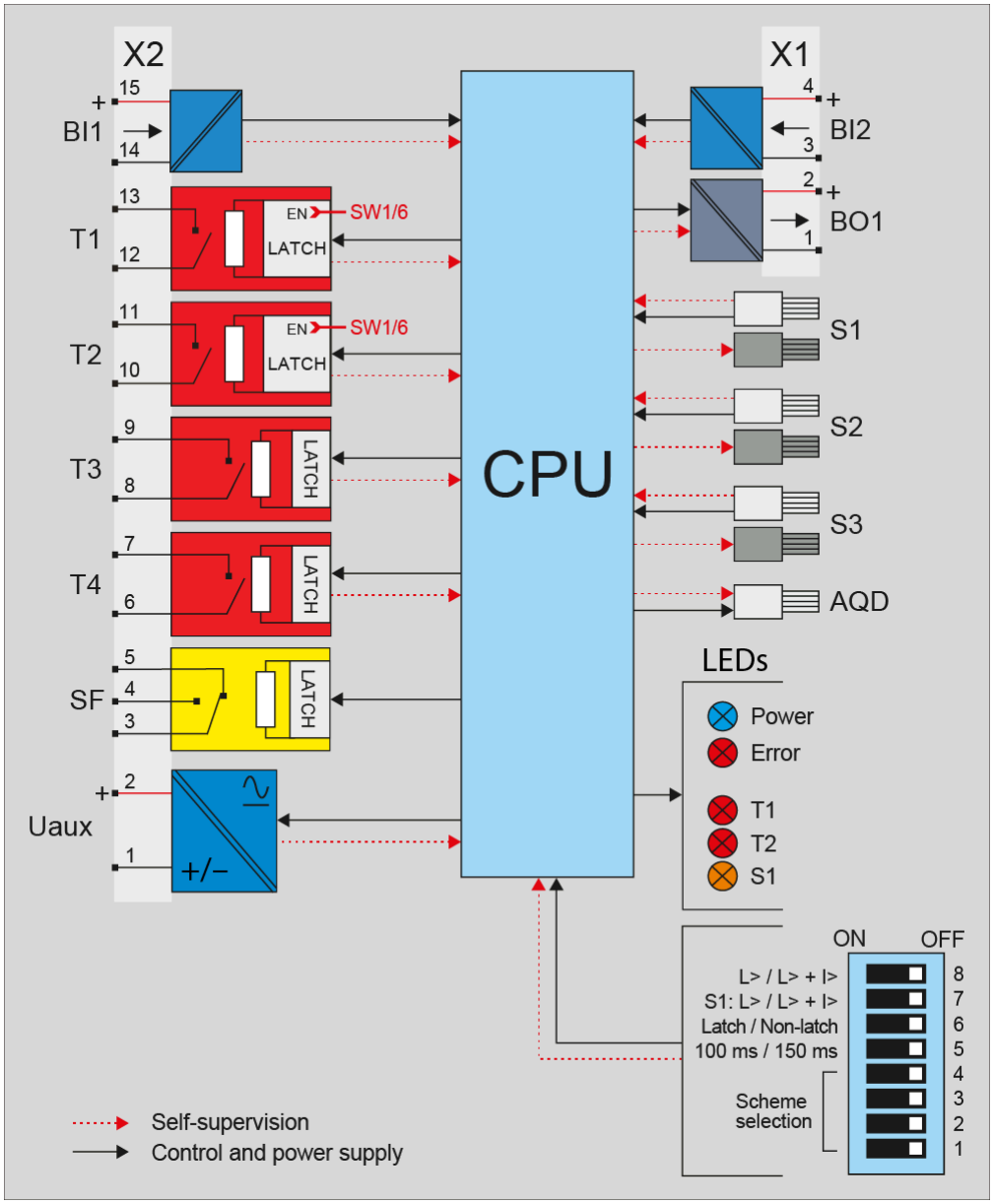

5.2 Inputs

5.2.1 Arc sensor channels

Figure. 5.2.1 - 4. Arc fiber loop sensor connections

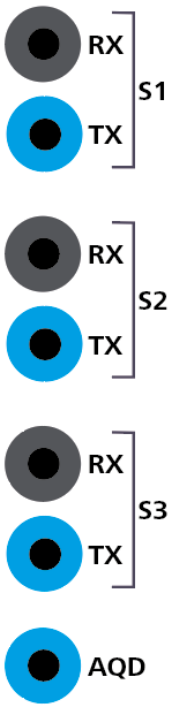

AQ-102 has three (3) fiber loop sensor channels: S1, S2 and S3. Each channel has a transmitter (Tx) terminal and a receiver (Rx) terminal. When the fiber loop is connected to the device, one of its ends is connected to "Tx" and the other to "Rx", both located at the rear of the device. This sensor loop is then continuously monitored by a test light pulse that travels through the loop. If a discontinuity is detected, the device goes into Error mode. See System self-supervision chapter for more information.

AQ-102 can be ordered with an additional transmitter (Tx) terminal for arc quenching device (AQD) control. Device sends a test light pulse continuously to the arc quenching device to supervise the fiber connection. If the arc quenching device doesn't receive the test pulses the device will go into Error mode.

For more information on sensors, please refer to the Arc sensors chapter as well as to the AQ-0x instruction booklet which can be found on Arcteq's website (https://www.arcteq.fi/downloads/). For more information on AQ-1000 arc quenching device (AQD) please refer to the AQ-1000 Instruction manual.

5.2.2 Binary inputs

Figure. 5.2.2 - 5. Binary input connections

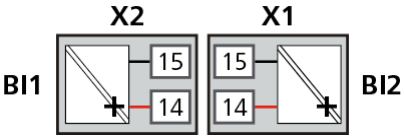

This device contains two (2) binary inputs. Typically, the binary inputs are used for receiving arc light signals, master trip commands or overcurrent signals. Function of binary inputs are configured using DIP switches. For more information, please refer to the DIP switch settings chapter.

Please note that when this device receives an overcurrent signal from a non-AQ 100 series device, the actual operating time depends on the operating time of the that device. Therefore, the total operating time cannot be specified in the technical data.

The binary inputs are activated when a connected DC signal reaches the specified nominal voltage level of the corresponding input. There are three (3) different nominal voltage levels available: 24, 110, or 220 VDC. The threshold value must be chosen and specified when ordering the unit. The actual activation threshold of the binary input is at a lower voltage than the specified nominal voltage value (see Techical Data chapter).

AQ 100 series devices monitor health of wiring between binary inputs and binary outputs. If binary input loses connection to any of the configured binary outputs, the device will go into Error mode. See System self-supervision chapter for more information.

5.3 Outputs

5.3.1 Binary outputs

Figure. 5.3.1 - 6. Binary output connection

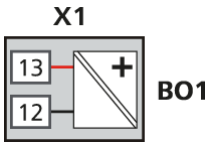

The device has one (1) binary output: BO1. AQ 100 series binary outputs have an internal 24 VDC power supply. This binary output is used for sending overcurrent, light detection, master trip and other signals to other AQ 100 series devices in the same system. The binary output function can be configured with the DIP switches. For more information on the configuration, please refer to the DIP switch settings chapter.

AQ 100 series device's binary outputs send out a short pulse every second. Binary inputs of the receiving AQ 100 series devices use these pulses to count the number of connected binary outputs. See System self-supervision chapter for more information.

NOTE!

Please note that the binary ouputs are polarity-sensitive.

5.3.2 Trip relays

Figure. 5.3.2 - 7. Trip relay connections

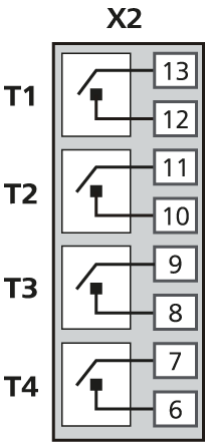

This device has four (4) normally open trip relay outputs. Trip relays T1 and T2 are used for tripping circuit breakers. T4 is generally used for tripping one additional disconnecting device, or as a trip alarm (local or remote) monitoring and alarming system.

T3 can alternatively be ordered as a normally closed trip relay (electronic lock-out relay). Once opened by fault detection it holds its open position until it receives a manual reset command or until auxiliary power supply is lost. When re-applying the auxiliary power supply, the electronic lock-out relay returns to the same contact condition it had prior to the power loss. This normally closed relay output can also be used for tripping contactor-controlled devices.

T3 and T4 are always latching relays. Trip relays T1 and T2 can be set as latching relays by setting DIP switch SW1:6 ("Latching / Non-latching") to "Latch" position. Latched relays can be reset by pressing the "SET" button.

5.3.3 System failure relay

Figure. 5.3.3 - 8. System failure relay connection (de-energized position)

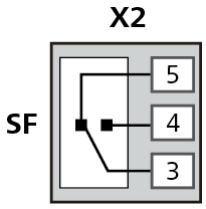

The system failure (SF) relay is of the change-over type (NO/NC) and it is energized when the device is in a healthy condition and powered on. Whenever the device detects a system error or the auxiliary power supply is disconnected, the SF relay changes its state. The state stays this way until the device returns to a healthy condition. See the System self-supervision chapter for more information.

5.4 Auxiliary voltage

Figure. 5.4 - 9. Auxiliary power supply connection

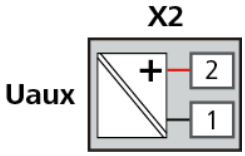

The auxiliary power supply voltage is 92….265 V AC/DC. Alternatively, the optional auxiliary power supply can be of 18…72 V DC. This choice must be specified when ordering.

6 Arc sensors

The AQ 100 series provides arc light point sensors and arc light fiber optic loop sensors. These sensors can be used with different devices and different switchgear types according to specific application requirements.

Arc light point sensors are typically installed in metal-clad compartments, and they provide a quick and accurate location of the faulted area. Arc light fiber loop sensors typically cover a wider protected area with one fiber, when there is no need to pinpoint the exact location for a fault.

6.1 Arc light fiber optic loop sensor AQ-06

AQ-06 is an arc light fiber optic loop sensor, which is a plastic fiber optic cable. Fiber sensors are distributed through the protected switchgear cells. The fixed light intensity threshold of an AQ-06 sensor is 8,000 lux. The sensor's detection radius is 360 degrees.

AQ-06 sensors can be ordered in pre-manufactured lengths of 3…40 meters (3 m, 5 m, 10 m, 15 m, 20 m, 25 m, 30 m, 35 m, 40 m).

6.2 Arc light fiber optic loop sensor AQ-07

AQ-07 is an arc light fiber optic loop sensor, which is a robust fiber optic cable with a practically unlimited bending radius. The sensor contains hundreds of glass fiber drains covered by a plastic tube, thus making it extremely strong and durable. Fiber sensors are distributed through the protected switchgear cells.

AQ-07 sensors can be ordered in pre-manufactured lengths of 3…50 meters (3 m, 5 m, 10 m, 15 m, 20 m, 25 m, 30 m, 35 m, 40 m, 45 m, 50 m).

The fixed light intensity threshold of an AQ-07 sensor is 8,000 lux. The sensor's detection radius is 360 degrees.

If necessary, the ends of an AQ-07 cable can be ordered with heat shrinking tubing to avoid light detection outside the protected zone. The covered area can be one (1) or two (2) meters by default; if other lengths are required, please consult the Arcteq sales team. You can find the Contact and reference information page at the end of this manual.

6.3 Arc light fiber optic loop sensor AQ-08

AQ-08 is an arc light fiber optic loop sensor. It is designed to withstand temperatures up to 125 ºC, which makes it suitable for e.g. wind turbine windings. AQ-08 is a robust fiber optic cable with a practically unlimited bending radius. The sensor contains hundreds of glass fiber drains that are covered by a plastic tube, thus making it extremely strong and durable. Fiber sensors are distributed through the protected switchgear cells.

AQ-08 sensors can be ordered in pre-manufactured lengths of 3…15 meters (3 m, 5 m, 10 m, 15 m).

The fixed light intensity threshold of an AQ-08 sensor is 8,000 lux. The sensor's detection radius is 360 degrees.

6.4 Sensor dependencies

Compatibility of arc sensor types depend on the hardware available in the AQ 100 series device. The table below describes those dependencies.

Table. 6.4 - 3. Sensor dependencies.

	Point sensors (AQ-01 & AQ-02)	Fiber loops (AQ-06, AQ-07 & AQ-08)
AQ-101	Yes	Order option
AQ-101D	Yes	Order option
AQ-101S	Yes	No
AQ-102	No	Yes
AQ-103	Yes	Order option
AQ-110P	Yes	Order option
AQ-110F	No	Yes

6.5 Connecting sensors

6.5.1 Fiber loop sensors

1. Drill holes on the wall for the sensor cable to enter the protected compartment.
2. Install protective covers in the holes to ensure the sensor cable remains unharmed by rough edges.

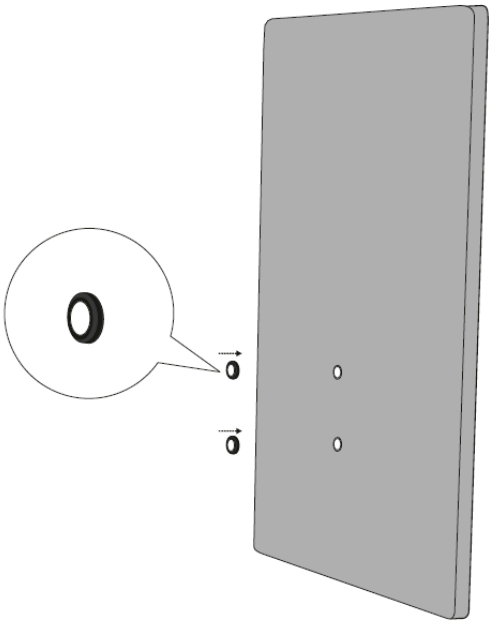

3. Run the sensor cable through the holes and along the protected area. Fasten it to the compartment walls with cable clips or some other appropriate anchoring method.

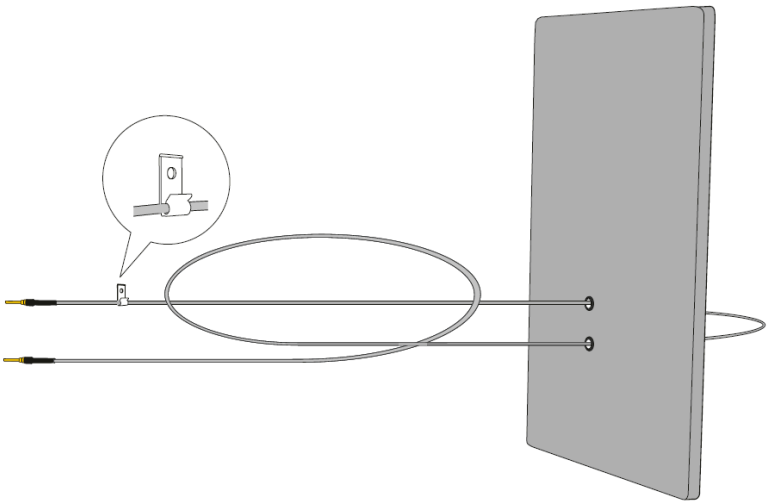

4. Turn the black and blue receiver (“Rx”) and transceiver (“Tx”) screws counter-clockwise and plug in the sensor cable terminals. Then turn the screws clockwise to secure the terminals in their place.

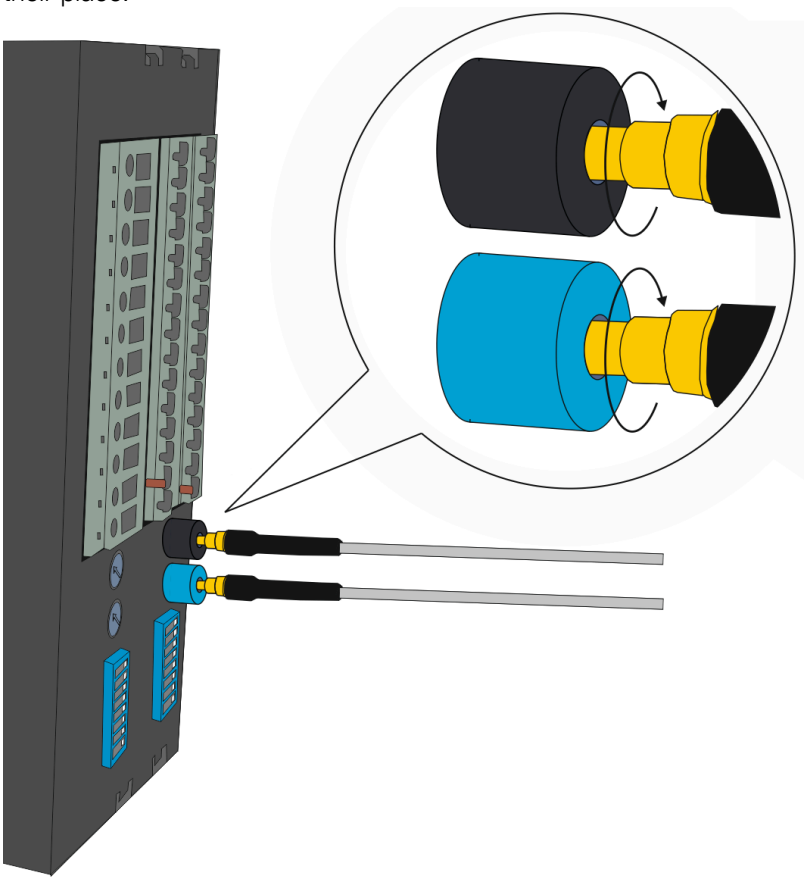

7 Operation and configuration

7.1 DIP switch settings

The DIP switches are used to easily configure various tripping logics and other functionalities for the device. The DIP switches are located at the back of the device. The figure below presents the DIP switch numbering, and the table below that gives a detailed description of the settings.

Protection logic can be defined by selecting a logic scheme with DIP switches 1 to 4. The scheme selection is based on binary arithmetic. Logic schemes are described in the next chapter.

Tripping can be set with DIP switches 7 and 8 to require either just arc light or both arc light and overcurrent simultaneously. Adding overcurrent criteria ensures the device trips when an arc fault occurs but not when a strong natural light source hits the light sensor (e.g. sunlight). Overcurrent signal comes from an external device (mainly AQ-110P or AQ-110F) and is connected to a binary input.

If the selected scheme uses CBFP (circuit breaker failure protection) its time delay (100 ms or 150 ms) can be set with DIP switch 5. CBFP logic depends on the chosen logic scheme. See Circuit breaker failure protection chapter for more information.

Figure. 7.1 - 10. DIP switch diagram.

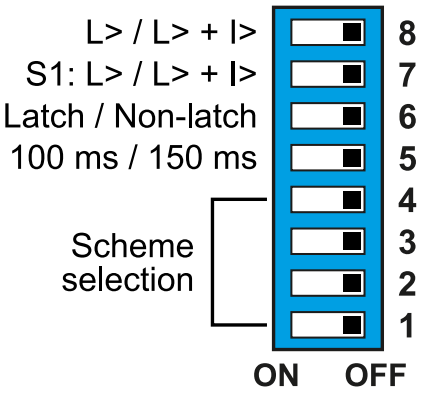

Table. 7.1 - 4. DIP switch settings.

Switch		Function selection	ON (left position)	OFF (right position)
8	L> or L> + I>	The tripping criterion for the S2, S3, S4 (point sensor) and S5 (fiber loop) channels.	Tripping on light only (L>).	Light detection only trips if overcurrent is also detected at the same time (L> + I>).
7	S1: L> or L> + I>	The tripping criterion for the S1 point sensor channel.		
6	Latching or Non-latching	Enables or disables latching of T1 and T2 trip relays.	T1 and T2 operate as latching relays.	T1 and T2 latching is disabled.
5	100 ms or 150 ms	The setting for the CBFP time.	The CBFP time is set to 100 ms.	The CBFP time is set to 150 ms.
4–1	Scheme selection	Scheme selection.	Please refer to the Scheme selection chapter. Switch 1: 1 Switch 2: 2 Switch 3: 4 Switch 4: 8	Please refer to the Scheme selection chapter. Switch 1: 0 Switch 2: 0 Switch 3: 0 Switch 4: 0

7.1.1 Scheme selection

This chapter describes the schemes that are available to this device. The schemes are configured using the DIP switches numbered 1…4 ("Scheme selection"). The scheme selection is based on binary arithmetic:

- Switch 1: 1
- Switch 2: 2
- Switch 3: 4
- Switch 4: 8

AQ 100 series arc protection devices can be used as a stand-alone device or as a part of a more complex arc portection system with multiple AQ 100 series devices. The most convenient way to set the device to a more complex arc protection system is to use Standard Arc Schemes (SAS). For detailed instructions on each of the available Standard Arc Schemes please refer to the AQ-SAS™ booklet (can be found at arcteq.fi/downloads/).

Figure. 7.1.1 - 11. DIP switches used for selecting the logic scheme.

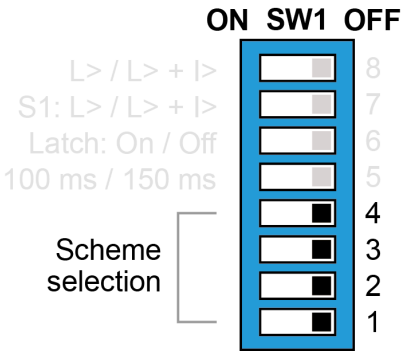

7.1.2 Available logic schemes

The schemes described below are the most commonly used ones for AQ-102 devices. However, additional schemes are also available; please contact your nearest Arcteq representative for more information on those schemes.

SS:0

The logic scheme SS:0 can be applied as a stand-alone arc protection scheme, but it can also be used for protecting non-selective outgoing feeder compartments.

You can find a more detailed description of this scheme in the AQ-SAS™ booklet.

Figure. 7.1.2 - 12. The trip logic matrix of SS:0.

SS:0		OUTPUTS					
		T1	T2	T3	T4	BO1	AQD
INPUTS	S1	x[1]	x[1]	x[1]	x[1]	x	x[2]
	S2	x[1]	x[1]	x[1]	x[1]	x	x[2]
	S3	x[1]	x[1]	x[1]	x[1]	x	x[2]
	Lext> (BI2)	x[1]	x[1]	x[1]	x[1]		x[2]

1) Activates only if DIP-switch has been set to light only mode or overcurrent signal (BI1) is ON.
2) Activates only when overcurrent signal (BI1) is ON.

Figure. 7.1.2 - 13. Simplified logic diagram of SS:0.

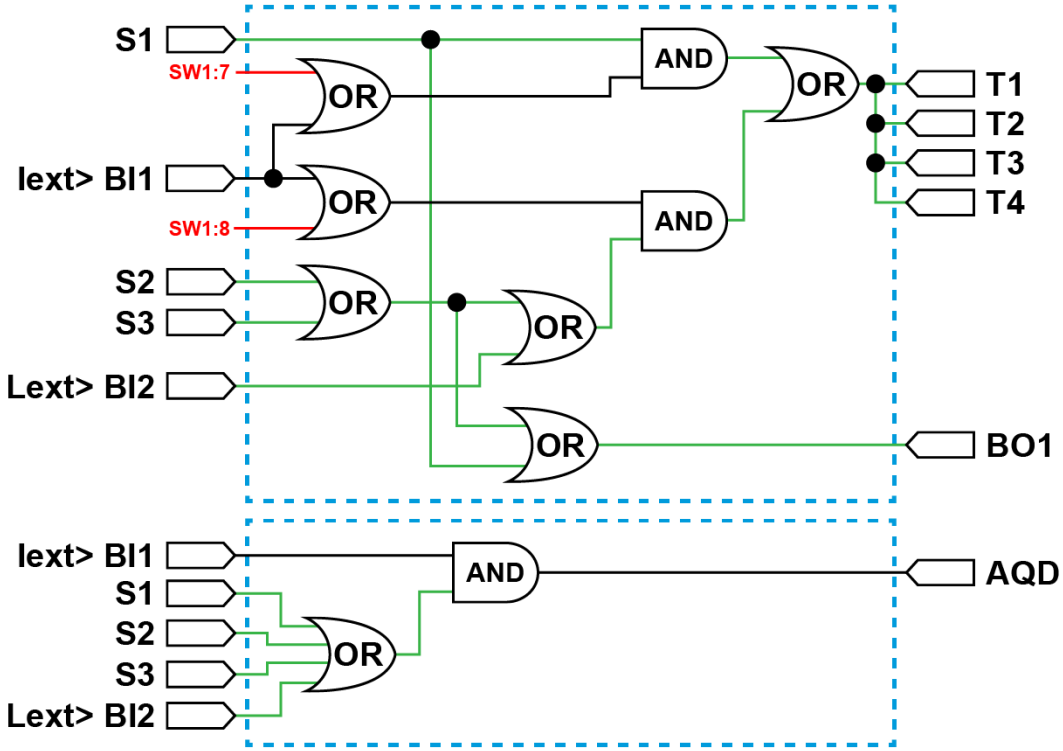

SS:1

The logic scheme SS:1 is mainly used in selective arc protection solutions. The fiber sensor S1 monitors the outgoing feeder cable compartment. The fiber sensor S2 monitors the corresponding feeder breaker compartment as well as the busbar compartment. The trip contact T1 is responsible for tripping the circuit breaker of the outgoing feeder.

You can find a more detailed description of this scheme in the AQ-SAS™ booklet.

Figure. 7.1.2 - 14. The trip logic matrix of SS:1.

SS:1		OUTPUTS					
		T1	T2	T3	T4	BO1	AQD
INPUTS	S1	x[1]	CBFP[1]	x[1]	x[1]	CBFP	
	S2		x[1]		x[1]	x	x[2]
	S3		x[1]		x[1]	x	x[2]
	Master Trip (BI2)	x	x	x	x		

1) Activates only if DIP-switch has been set to light only mode or overcurrent signal (BI1) is ON.
2) Activates only when overcurrent signal (BI1) is ON.

Figure. 7.1.2 - 15. Simplified logic diagram of SS:1.

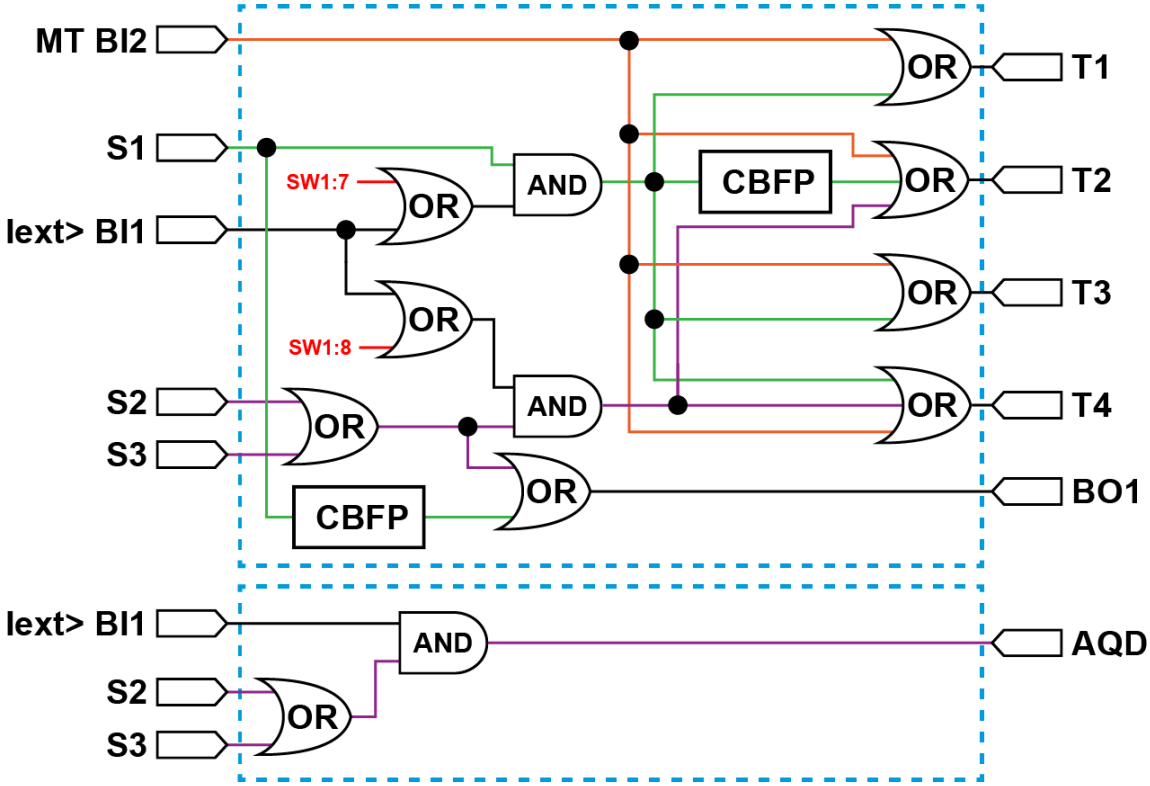

7.2 Push button (SET)

The device contains one push button, SET, and it can be used for all operational functions. The push button is used for:

1. Setting up the system (also known as auto-configuration)
2. Resetting the indicator LEDs
3. Resetting latched outputs
4. Checking the input connections

Figure. 7.2 - 16. The "SET" push button on the device's front panel.

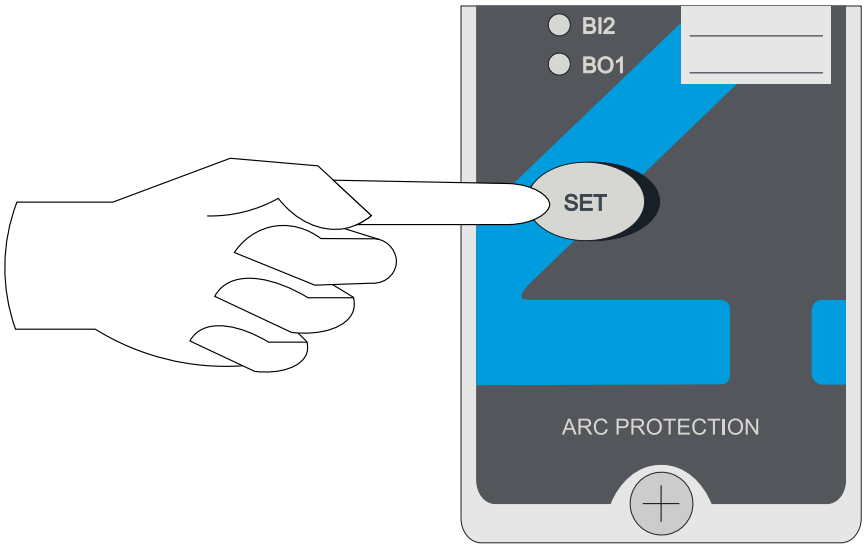

7.2.1 System setup (auto-configuration)

After DIP switches have been set to correct position and all sensors, binary inputs and binary outputs have been connected, a system setup procedure (also known as auto-configuration) must be performed. The sequence is initialized by pressing the SET push button for two seconds. This causes the sensor and binary I/O LEDs to start blinking. The device scans these inputs to see if they are connected; when an input is detected, the corresponding LED lights up to indicate that a connection was found. All inputs that are not connected continue to blink for three more seconds. Then, all LEDs are turned off. Additionally, the DIP switch setting are stored in the non-volatile memory after this sequence.

All arc sensors are operational even when they have not been auto-configured. System setup is only used for self-supervision purposes.

Please note that to reconfigure a device with fewer connections (BI/BO or arc sensors) than in the previously memorized setup, one of the DIP switches must be moved back and forth once before the system setup procedure is carried out. You can reconfigure a device with more connections at any time without having to move one of the DIP switches.

7.2.2 Reset

All LED indications and latched trip relays can be reset by pressing the SET push button.

7.2.3 Input connection check

After the system setup (auto-configuration) procedure is completed, you can verify the connectivity of all sensors and binary input channels by pressing the SET push button three (3) times within two (2) seconds. The LEDs of the corresponding sensors, binary input channels and the “Power” LED start blinking. The LEDs blink as many times as there are connected sensors and binary output channels from other devices.

7.3 Circuit breaker failure protection

The circuit breaker failure protection function is used for detecting a failure to open the breaker when tripping command has been given by the arc protection relay. The CBFP function activates when the arc protection relay detects the presence of fault for a set duration (100 ms or 150 ms). In case of circuit breaker failure the arc protection relay will send a trip signal to the next available breaker. Please note that if the device is set to operate on both arc light and overcurrent, both conditions must persist to activate the CBFP function. The CBFP function can be set to operate either on a 100-ms or a 150-ms delay (please refer to the DIP switch settings chapter for more information). The operation logic of CBFP function depends on the chosen logic scheme (see Scheme selection chapter for more information).

7.4 LED indicator functions

The AQ-102 device has eleven (11) indication LEDs on the device's front panel.. Apart from the "Power" and "Error" LEDs, the user can write their own identifications for each of the remaining LEDs on the text insert located in the transparent pocket next to the LEDs.

When the device is powered up, it performs an LED test. All LEDs turn on for two (2) seconds and then turn off; only the blue "Power" LED stays on.

When the device operates normally, only the blue "Power" LED is lit.

If an arc sensor is activated, its corresponding LED turns on. Activated arc sensor LEDs will stay on until user has reset them with "SET" push button.

If there is a loose sensor wire or if the self-supervision function detects a configuration mismatch (that is, a new sensor has been attached but the auto-configuration system setup has not been run), the corresponding LED starts flashing and the "Error" LED activates.

The binary I/O LEDs indicate the status of the input and output lines. If any of the lines become active, the corresponding LED turns on. All light channel and trip indication LEDs are latched, even if the DIP switch settings are in the non-latched mode.

All LED indications are stored in the non-volatile memory (EPROM) to help identify the necessary trip information even after auxiliary power is lost. When the device is re-powered after a power supply loss, the front panel shows the status of all LEDs.

You can clear the LEDs by pushing the SET button.

7.5 LED operations guide

The table below describes the function of each indicator LED in detail.

Table. 7.5 - 5. LED operations AQ-102.

LED name (color)	Light off	Steady light	Blinking light	Action if abnormal
POWER (blue)	The auxiliary power supply is disconnected.	The auxiliary power supply is connected.	*(N/A)*	Check the power supply.
ERROR (red)	The system is healthy.	A system failure has occured.	A configuration mismatch has been detected. Protection is partially operational.	Verify the system condition (see the System self-supervision and Troubleshooting chapters).
T1–T4 (red)	Normal status.	The trip relay in question has activated.	*(N/A)*	Check what caused the trip, clear the fault and reset the indicator LEDs with the push button.
S1–S3 (amber)	Normal status.	The fiber sensor channel has activated.	The fiber sensor has dropped off or a system setup has not been performed.	Check the sensor continuity or perform a system setup (see the System setup chapter); or, check what activated the sensor.
AQD (amber)	Normal status.	The AQD (arc quenching device) channel has been activated.	The fiber connection to the AQD (arc quenching device) has dropped off or a system setup has not been performed.	Check the fiber connection and/or the system configuration.
BI1–BI2 (amber)	Normal status.	The binary input has been activated.	The binary input has a loose connection.	Check the binary input wiring.
BO1 (amber)	Normal status.	The binary output has been activated.	*(N/A)*	—

7.6 Non-volatile memory

All critical system data (such as DIP switch settings and the system setup file) are stored in the non-volatile memory (EPROM) to ensure accurate operation and full self-supervision even if auxiliary power is lost temporarily.

Additionally, all LED indications are stored in the non-volatile memory to provide a quick recovery of the system status indication. This feature is especially important if tripping causes the device to lose its auxiliary power.

The non-volatile memory does not require a power supply to maintain the information and it retains the settings and the indications permanently without power.

8 System self-supervision

AQ 100 series devices have an extensive self-supervision function, including both internal functions and external connections. The self-supervision function monitors the following:

- power supply
- hardware
- software
- binary input connection(s)
- sensor connection(s)
- DIP switch settings

When the device's condition is healthy and is powered on, the "Power" LED is lit and the system failure (SF) relay is energized. If the self-supervision function detects a faulty condition or if the power supply fails, the SF relay is released and the "Error" LED becomes lit.

Fiber loop connection monitoring

Fiber loop channel(s) is monitored by a test light pulse that travels through the loop. If a discontinuity is detected, the "Error" LED turns on, the SF relay releases, and the LED of the corresponding faulty sensor channel starts blinking. If the error is resolved, the device automatically clears the system failure status, energizing the SF relay and turning off the "Error" LED. The device remains in Error mode until the sensors are connected again.

Binary input connection monitoring

During system setup (auto-configuration) AQ 100 series device checks how many AQ 100 device binary outputs have been connected to binary inputs. Each AQ 100 series device binary output constantly sends a short pulse every second which the receiving binary input uses to count the number of connected devices. If any of the binary outputs are disconnected after the system setup, the binary input will detect the mismatch and the device will go into Error mode and the binary input LED will blink. If the error is resolved, the device automatically clears the system failure status, energizing the SF relay and turning off the "Error" LED.

DIP switch setting monitoring

The device goes into Error mode, if a DIP switch setting is changed after the system setup procedure has been performed. However, the configured (stored) settings are still valid and the device is still operational.

9 Application examples

This device can be applied to a variety of power switchgear and controlgear layouts and technologies. This chapter describes some of the most typical applications. Please consult the AQ-SAS™ booklet (can be found at arcteq.fi/downloads/) or your nearest Arcteq representative for a solution to your particular application.

9.1 Application with overcurrent and arc light conditions (LV and MV)

AQ-102 can be used for applications that require tripping from both overcurrent (I>) and arc light (L>), where tripping is performed only when both conditions occur simultaneously. Typically, the overcurrent condition is obtained from an AQ-110 device. The I> condition can also be monitored by non-Arcteq products (such as a generic feeder protection relay); however, the total operating time cannot be guaranteed to be as stated in the technical data, as that is dependent on the device feeding the I> signal to the AQ-102 device. Please note that the S1 sensor channel can be set to operate solely on the light condition, even if other channels are set to operate on both conditions.

The figure below presents an example system (for both LV and MV) that applies both I> and L> for tripping from the S2 and S3 fiber sensor channels, while the S1 fiber sensor channel is set to only activate on the light condition. S1 monitors the transformer feeder's bus duct located above the current monitoring point. S2 monitors the main breaker and the busbar. S3 monitors each of the feeders (for the maximum length for each fiber sensor type, please refer to the Arc sensors and Technical data chapters). The current monitoring signal can come from an external overcurrent relay or an AQ-110 device. In this application, an overcurrent relay (50/51) monitors the I> condition.

Figure. 9.1 - 17. Connections of the I> and L> application for AQ-102.

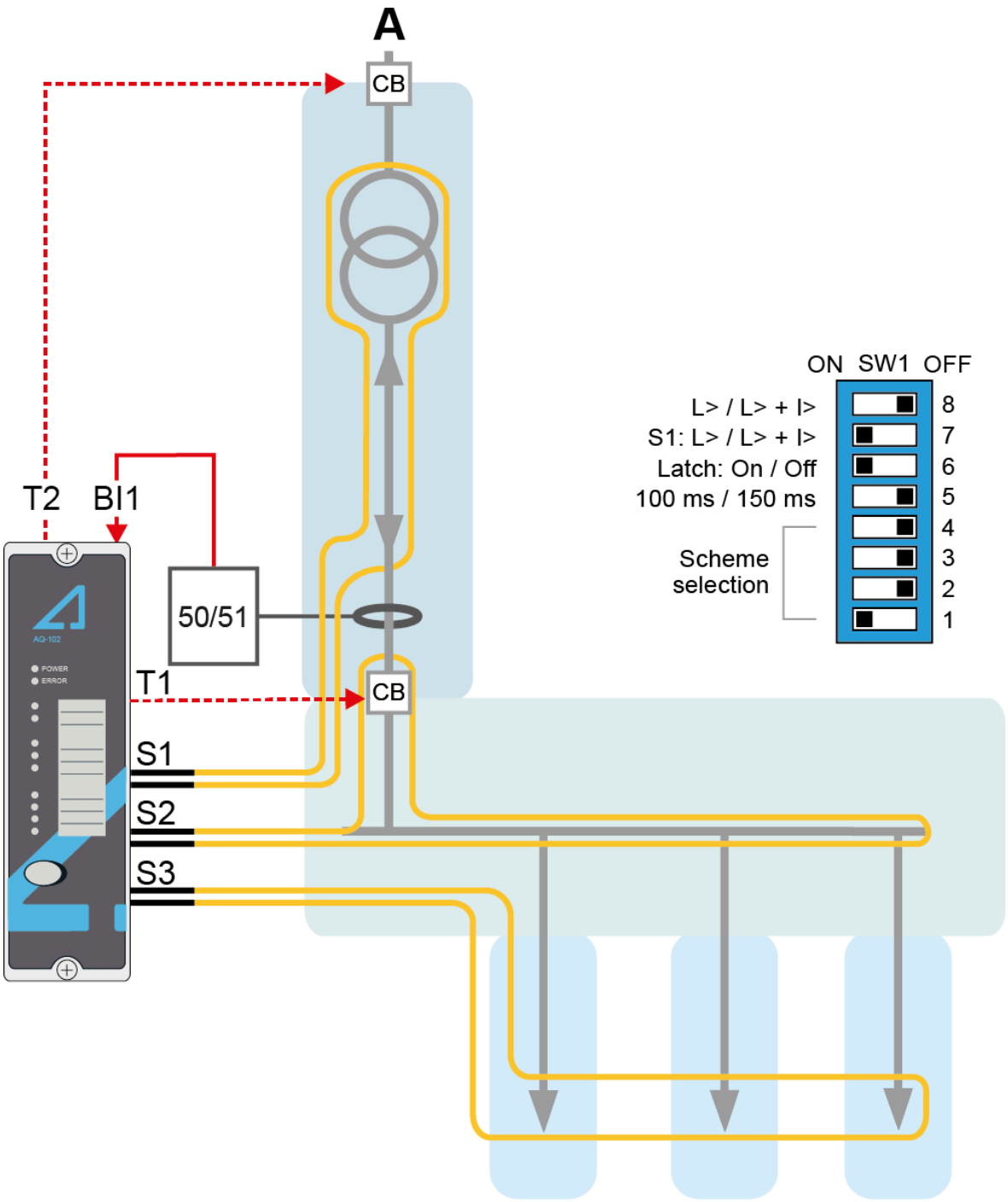

10 Wiring example

Figure. 10 - 18. Example wiring diagram for AQ-102.

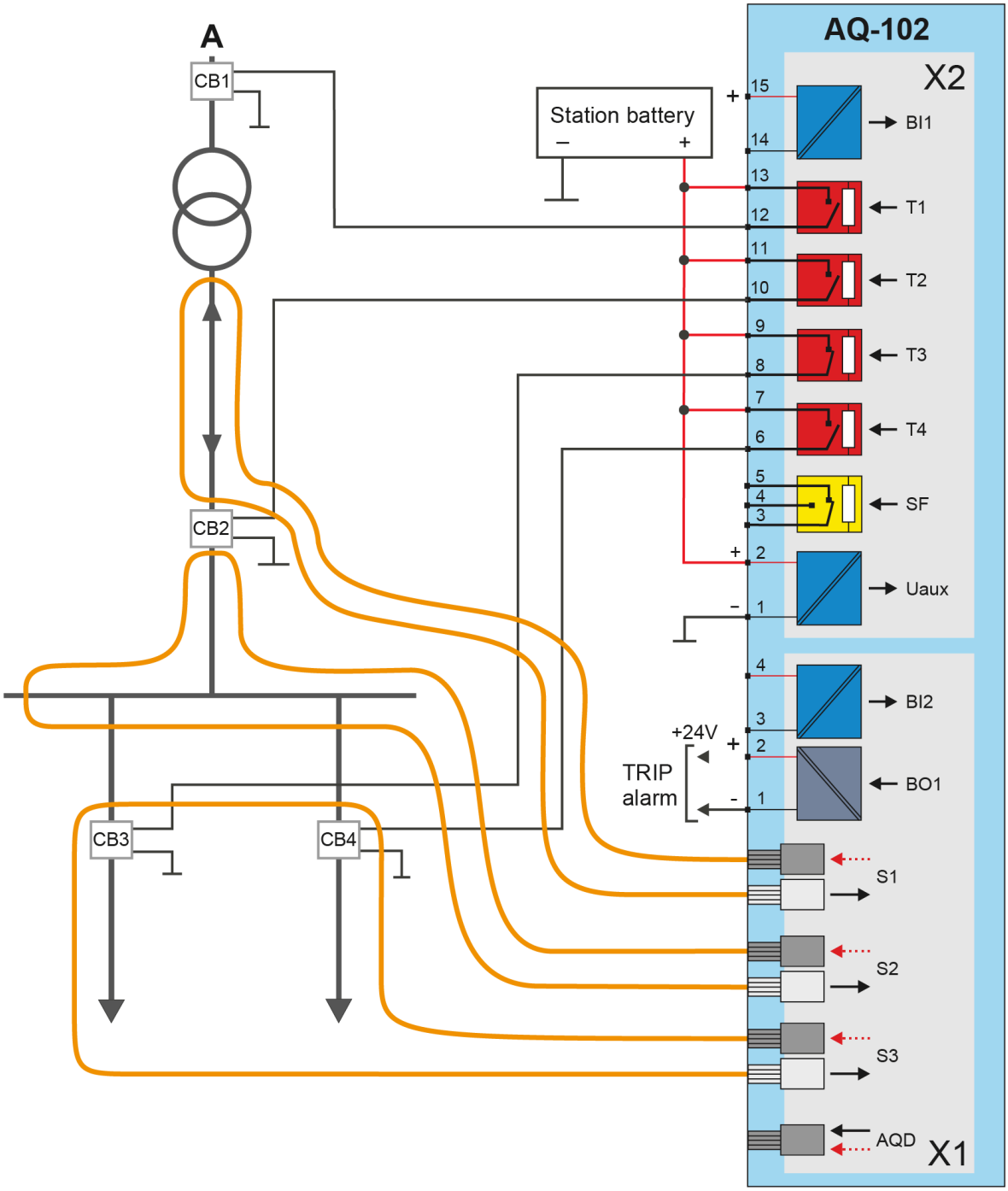

11 Dimensions and installation

AQ-102 can be either door-mounted or panel-mounted in a standard 19 inch rack. The device's dimensions (without PCBs) are as follows:

- Height: 157 mm (6.18 in)
- Width: 50 mm (1.97 in)
- Depth: 160 mm (6.30 in).

The figure below presents the dimension of the device visually. It also shows the dimensions of the cut-out (bottom-left) required when mounting the device on a panel.

Figure. 11 - 19. Dimensions of the device.

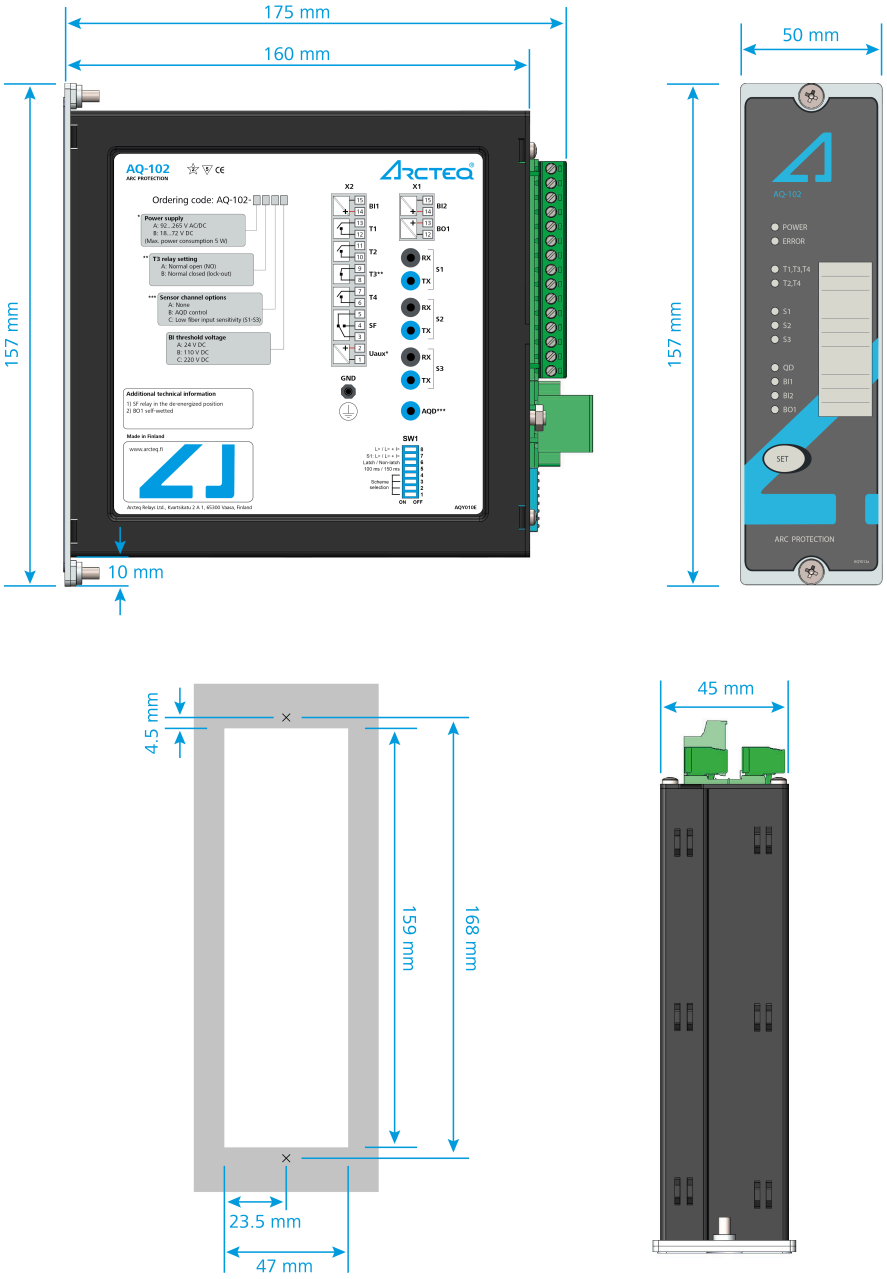

The following image illustrates how a device is installed into a cut-out. Please note that as AQ-102 is narrower than the device in the image, they are connected to the cut-out panel by a single screw on both the top and the bottom of the front panel instead of the two depicted below.

Figure. 11 - 20. Installing a device into a cut-out.

12 Testing

It is recommended that the device is tested prior to substation energizing. Testing is carried out by simulating an arc light for each sensor and verifying that the correct trip contact(s) tripped and that the correct indicator LED(s) turned on.

Any strong camera flash works well to simulate arc light. Please note that small LED lights like smartphone flashes are not strong enough to activate a point sensor or a fiber loop. Having a self-timer helps with the testing process because it can be connected to the test kit. Any strong flashlight works to test non-latched signals and the CBFP function. Before testing please check that the equipment used has a fully charged battery.

12.1 Testing the light-only mode

1. Check that the DIP switch settings are positioned according to your application.
2. Activate the camera flash within 30 cm (12 inches) of the sensor that is being tested.
3. Verify that the indicator LED of the corresponding sensor channel is lit.
4. Verify the activation(s) of the relay output(s) by checking the circuit breaker's status, or by monitoring the trip contact's status. The circuit breaker should open, or the contacts operate. Please note that you achieve the best test results when you operate the circuit breaker while testing.
5. Verify that the indicator LED(s) of the corresponding relay output(s) is lit.
6. If you are using the BO1 binary output, verify its signal activation either through the status change of the relevant input, or by measuring the signal output voltage. Please note that BO1 is of the non-latched type.
7. If you are using the BO1 binary output, also verify that the "BO1" LED is lit.
8. Press the SET push button to reset all indications and latches.
9. If you are using the BI2 binary input as the master trip, activate it and verify that the trip has occurred by repeating the steps 4 and 5.
10. Press the SET push button to reset all indications and latches.
11. Repeat the steps 1 through 10 for all sensors.

12.2 Testing the light and current mode

1. Check that the DIP switch settings are positioned according to your application.
2. Activate the following two things simultaneously: the camera flash within 30 cm (12 inches) of the sensor that is being tested, and the binary input used for the overcurrent condition (I>).
3. Verify that the indicator LED of the corresponding sensor channel is lit.
4. Verify that the indicator LED of the binary input is lit.
5. Verify the activation(s) of the relay output(s) by checking the circuit breaker's status, or by monitoring the trip contact's status. The circuit breaker should open, or the contacts operate. Please note that you achieve the best test results when you operate the circuit breaker while testing.
6. Verify that the indicator LED(s) of the corresponding relay output(s) is lit.
7. If you are using the BO1 binary output, verify its signal activation either through the status change of the relevant input, or by measuring the signal output voltage. Please note that BO1 is of the non-latched type.
8. If you are using the BO1 binary output, also verify that the "BO1" LED is lit.
9. Activate the camera flash within 30 cm (12 inches) of the sensor but do not activate the binary input used for the overcurrent condition (I>).
10. Verify that no trip has occured and only the indicator LED of the sensor activation is lit.
11. If you are using the BO1 signal and have configured it to send light information, verify that it is activated.
12. Press the SET push button to reset all indications and latches.

13. If you are using a binary input as the master trip, activate it and verify that the trip has occurred by repeating the steps 5 and 6.
14. Press the SET push button to reset all indications and latches.
15. Repeat the steps 1 through 13 for all sensors.

12.3 Testing the CBFP function

The circuit breaker failure protection (CBFP) function is tested by taking the light signal and the additional trip criterion signal (if applicable) and leaving them active for longer than the set CBFP time (that is, 100 or 150 ms). Check that the correct outputs activated after the set delay time.

12.4 Testing the operation time

An operation time test is not required at commissioning as it is performed by the manufacturer both as a type test and as a routine production test. If you want to have more information of these tests, please refer to the routine test reports sent with the AQ-102 device and/or consult your nearest Arcteq representative for the type test reports.

However, if it is deemed necessary, you can conduct an on-site timing test with the following instructions.

1. Use a calibrated relay test set.
2. Connect one of the test set's outputs to a strong camera flash to initialize the flash and to configure the set's timer to start simultaneously with the flash.
3. Connect one of the AQ-102 device's trip outputs (T1, T2, T3, T4) to a test set input and configure the input to stop the timer.
4. Place the camera flash within 30 cm (12 inches) of the sensor.
5. Initiate the flash and the timer by using the test set output.
6. Read the measured time between the simulated arc light and the operation of the trip contact.
7. Subtract the digital input delay of the test set from the final measured time (if applicable). For specific test instructions, please consult the manufacturer of the relay test set.

12.5 Test plan example

Basic data	
Date:	
Substation:	
Switchgear:	
Serial number:	

AQ-102

Preconditions		Additional notes
Trip mode (channel 1):	___ L> ___ L> + I>	
Trip mode (channel 2)	___ L> ___ L> + I>	
Trip mode (channel 3):	___ L> ___ L> + I>	
BI master trip in use:	___ Yes ___ No	
CBFP in use:	___ Yes ___ No	
CBFP time setting:	___ 100 ms ___ 150 ms	

Object activated	LED active	T1, T2, T3, T4 active	BO1 active	Additional notes
Fiber sensor channel 1				
Fiber sensor channel 2				
Fiber sensor channel 3				
Binary input 1				
Binary input 2				

Involved personnel	
Tested by:	
Approved by:	

13 Troubleshooting

Table. 13 - 6. Troubleshooting guide for AQ-102.

Problem	Possible solution(s)
The sensor does not activate during testing.	Check the sensor connection. or Check the testing equipment, especially the camera flash intensity (see the Testing chapter for more information).
The trip relay does not operate even when the sensor is activated.	Tripping might require overcurrent signal simultaneously with light signal. Check the DIP switch settings (see the "DIP switch settings" chapter for more information).

14 Technical data

14.1 Mounting and installation

Table. 14.1 - 7. Technical data for relay mounting and installation.

Panel: - material - thickness (min...max)	 metal 1.0...5.0 mm (0.04...0.20 in)
Panel mounting: - screw type - key size - tightening torque (min...max)	 ISO 14581 M4x12, galvanized Torx T20 1.5...2.0 N·m (13.3...17.7 lbf·in)
Grounding: - nut type - key size - tightening torque (min...max)	 DIN934-M5 galvanized 8 2.5...3.0 N·m (22.1...26.6 lbf·in)
Connector X1: - connector type - wire cross section (min...max) - minimum stripping length - screw tightening torque (min...max)	 Phoenix Contact FRONT-MSTB 2,5/4-STF-5,08 0.34...2.5 mm^2 (24...12 AWG) 10 mm (0.39 in) 0.5...0.6 N·m (4.4...5.3 lbf·in)
Connector X2: - connector type - wire cross section (min...max) - minimum stripping length - screw tightening torque (min...max)	 Phoenix Contact FRONT-MSTB 2,5/15-STF-5,08 0.34...2.5 mm^2 (24...12 AWG) 10 mm (0.39 in) 0.5...0.6 N·m (4.4...5.3 lbf·in)
Fiber connectors: - nut tightening torque	 light finger tightening

14.2 Operating times

Table. 14.2 - 8. Technical data for relay operating times.

Trip time using mechanical trip relays	7 ms*
Reset time (arc light stage)	2 ms

*) The total trip time when using both the arc light (L>) or phase/residual overcurrent (I>) from an AQ-110 device and the arc light (L>) from this device.

14.3 Auxiliary voltage

Table. 14.3 - 9. Technical data for the relay auxiliary voltage (Uaux).

Auxiliary power supply	92…265 V AC/DC 18…72 V DC (optional)
Maximum power consumption	5 W, < 10 mΩ
Standby current	90 mA
Start-up inrush current	<150 ms (110 V DC) <600 ms (24 V DC)

14.4 Binary inputs

Table. 14.4 - 10. Technical data for the binary inputs (BI1, BI2).

Nominal threshold voltage	24 V DC or 110 V DC or 220 V DC
Threshold: - pick-up - drip-off	 Approximately 16 V DC or 88 V DC or 178 V DC Approximately 15 V DC or 75 V DC or 155 V DC
Rated current	3 mA
Number of inputs	2

14.5 Trip relays

Table. 14.5 - 11. Technical data for the trip relays (T1, T2, T3, T4).

Number of trip relays	4 NO or 3 NO + 1 NC
Voltage withstand	250 V AC/DC
Carry: - continuous carry - make-and-carry for 3 s - make-and-carry for 0.5 s	 5 A 16 A 30 A
Breaking capacity DC*	40 W (0.36 A at 110 V DC)
Contact material	AgNi 90/10

*) When the time constant L/R = 40 ms.

14.6 Binary output(s)

Table. 14.6 - 12. Technical data for the binary output (BO1).

Number of outputs	1
Rated voltage	+24 V DC (internal power supply)
Rated current (max.)	20 mA

14.7 System failure relay

Table. 14.7 - 13. Technical data for the system failure relay (SF).

Number of SF relays	1
Rated voltage	250 V AC/DC
Carry: - continuous carry - make-and-carry for 3 s - make-and-carry for 0.5 s	 5 A 16 A 30 A
Breaking capacity DC*	40 W (0.36 A at 110 V DC)
Contact material	AgNi 90/10

*) When the time constant L/R = 40 ms.

14.8 Fiber optic loop sensors

AQ-06 fiber optic loop sensor

Table. 14.8 - 14. Technical data for the AQ-06 fiber optic loop sensor.

Material	Plastic fiber
Light intensity threshold	8,000 lux
Cable length (min…max)	3…40 m
Cable diameter	1.0 mm
Detection radius	360º
Bending radius	5 cm
Operating temperature	–40…+85 ºC

AQ-07 fiber optic loop sensor

Table. 14.8 - 15. Technical data for the AQ-07 fiber optic loop sensor.

Material	Covered glass fiber
Light intensity threshold	8,000 lux
Cable length (min…max)	3…50 m
Cable diameter	1.2 mm
Detection radius	360º
Bending radius	1 cm
Operating temperature	–40…+85 ºC

AQ-08 fiber optic loop sensor

Table. 14.8 - 16. Technical data for the AQ-08 fiber optic loop sensor.

Material	Covered glass fiber
Light intensity threshold	8,000 lux
Cable length (min…max)	3…15 m
Cable diameter	1.2 mm
Detection radius	360º
Bending radius	1 cm
Operating temperature	–40…+125 ºC

14.9 Disturbance tests

Table. 14.9 - 17. Technical data for the disturbance tests.

Electromagnetic compatibility test	CE-approved and tested according to EN 50081-2 and EN 50082-2
Conducted emission (EN 55011, class A)	0.15…30.00 Hz
Radiated emission (EN 55011, class A)	30.00…1,000.00 MHz

Electrostatic discharge immunity (IEC 244-222 and EN 61000-4-2, level 4)	Air discharge: 15 kV Contact discharge: 8 kV
Electrical fast transients (EN 61000-4-4, class III & IEC 801-4, level 4)	Power supply input: 4 kV, 5/50 ns Other inputs and outputs: 4 kV, 5/50 ns
Surge immunity (EN 61000-4-5, level 4)	Between wires: 2 kV, 1.2/50 µs Between wire and earth: 4 kV, 1.2/50 µs
RF electromagnetic field (EN 61000-4-3, level 3)	f = 80…1,000 MHz, 10 V/m
Conducted RF field (EN 61000-4-6, level 3)	f = 150 kHz…80 MHz, 10 V/m

14.10 Voltage tests

Table. 14.10 - 18. Technical data for the voltage tests.

Insulation test voltage (IEC 60255-5)	2 kV, 50 Hz, 1 min
Impulse test voltage (IEC 60255-5)	5 kV, 1.2/50 µs, 0.5 J

14.11 Mechanical tests

Table. 14.11 - 19. Technical data for the mechanical tests.

Vibration test	2…13.2 Hz (± 3.5 mm) 13.2…100 Hz (±1.0 g)
Shock/bump test (IEC 60255-21-2)	20 g and 1,000 bumps/dir.

14.12 Environmental conditions

Table. 14.12 - 20. Technical data for the environmental conditions.

Specified ambient service temperature	–35…+70 ºC
Transportation and storage temperature	–40…+70 ºC
Relative humidity	Up to 97 %
Altitude	Up to 2,000 m above sea level

14.13 Casing

Table. 14.13 - 21. Technical data for the device casing.

Protection: - front - back	 IP 50 IP 20
Device dimensions (W × H × D)	50 × 177 × 161 mm
Weight	0.7 kg

15 Ordering information

AQ-102 fiber optic loop sensor device

AQ - 1 0 2 - X X X X

Auxiliary power supply

A 92...265 V AC/DC
B 18...72 V DC

T3 trip relay setting

A Normally open (NO)
B Normally closed (NC), or Electronic lock-out

Additional options

A None
B AQD control
C Low fiber input sensitivity (S1-S3)

Binary input threshold voltage

A 24 V DC
B 110 V DC
C 220 V DC

AQ-0x fiber optic loop sensors

AQ - 0 X - X - X - X

Sensor function

6 Plastic fiber optic loop sensor
7 Glass fiber optic loop sensor
8 Glass fiber optic loop sensor (high temperature)

Cable length

(see the available options in the "Arc sensors" chapter of this manual)

End 1 covering length (AQ-07 only!)

0 None
1 1 meter
2 2 meters
(for other lengths please consult Arcteq sales at sales@arcteq.fi)

End 2 covering length (AQ-07 only!)

0 None
1 1 meter
2 2 meters
(for other lengths please consult Arcteq sales at sales@arcteq.fi)

Accessories

Order code	Description	Note	Manufacturer
AQX006	Wall mounting bracket	For AQ-103 and AQ-110x variants (MV and LV).	Arcteq Ltd.
AQX016	Wall mounting bracket	For AQ-101, AQ-101S and AQ-102 devices (MV and LV).	Arcteq Ltd.

16 Contact and reference information

Manufacturer

Arcteq Relays Ltd.

Visiting and postal address

Kvartsikatu 2 A 1

65300 Vaasa, Finland

Contacts

Phone:	+358 10 3221 370
Website:	arcteq.fi
Technical support:	support.arcteq.fi
	+358 10 3221 388 (EET 9:00 – 17.00)
E-mail (sales):	sales@arcteq.fi