ARCTEQ®
PART OF ENSTO GROUP

AQ-103LV

Arc flash protection device

Instruction manual

Table of contents

Disclaimer

Please read these instructions carefully before using the equipment or taking any other actions with respect to the equipment. Only trained and qualified persons are allowed to perform installation, operation, service or maintenance of the equipment. Such qualified persons have the responsibility to take all appropriate measures, including e.g. use of authentication, encryption, anti-virus programs, safe switching programs etc. necessary to ensure a safe and secure environment and usability of the equipment. The warranty granted to the equipment remains in force only provided that the instructions contained in this document have been strictly complied with.

Nothing contained in this document shall increase the liability or extend the warranty obligations of the manufacturer Arcteq Relays Ltd. The manufacturer expressly disclaims any and all liability for any damages and/or losses caused due to a failure to comply with the instructions contained herein or caused by persons who do not fulfil the aforementioned requirements. Furthermore, the manufacturer shall not be liable for possible errors in this document.

Please note that you must always comply with applicable local legislation and regulations. The manufacturer gives no warranties that the content of this document is in all respects in line with local laws and regulations and assumes no liability for such possible deviations.

You are advised to notify the manufacturer in case you become aware of any errors in this document or of defects in the equipment.

The manufacturer reserves the right to update or amend this document at any time.

Copyright

1 Document information

Table. 1 - 1. History of Revision 1.

Revision	1.00
Date	September 2020
Changes	- The first revision of the manual.
Revision	1.01
Date	December 2020
Changes	- Updated the Modbus map.
Revision	1.02
Date	January 2023
Changes	- Updated the Arcteq logo on the cover. - Updated the distance between the flash and the unit in the "Testing the unit operation time" chapter. - Unified terminology used througout the manual (e.g. unit and device means the same thing. Now all AQ 100 series relays are called "devices"). - Improved many existing drawings. - Rearranged topics into a more logical order. - Added connection drawings to input and output descriptions under "Connections" chapter. - Added hyperlinks to chapters. (e.g. "See Device features chapter for more information") - Listed more features in Device features chapter. - T3 is now considered to be normally open by default and normally closed as an order option. - Added information about binary output pulse messages. - Many tables have been simplified and made easier to read. - Scheme matrixes and simplified logic diagrams have been made more detailed in "Available schemes" chapter.

2 Abbreviations

AQD – arc quenching device

BI – binary input

BO – binary output

CB – circuit breaker

CBFP – circuit breaker failure protection

CT – current transformer

EPROM – erasable, programmable read-only memory

HSO – high-speed output

LED – light emitting diode

LV – low-voltage

MV – medium-voltage

NC – normally closed

NO – normally open

PCB – printed circuit board

RF – radio frequency

Rx – receiver

SAS – standard arc scheme

SF – system failure

Tx – transceiver

µP - microprocessor

3 General

The AQ-103LV is a sophisticated microprocessor-based arc flash protection device with point sensor channels and an optional fiber loop sensor channel. The device is designed to minimize the damage caused by an arc fault. This is done by tripping the circuit breaker which supplies current to the fault when sensors detect arc light.

The device includes a complete system self-supervision functionality of which provides the highest level of dependability as it continuously monitors all internal system functions.

Figure. 3 - 1. Arc protection device AQ-103LV.

The AQ-103LV is designed according to the latest protection relay standards and it is therefore suitable for installations in rough environments. These include utilities and power plants (both traditional and renewable), various heavy industry applications (oil, gas, mining, steel, etc.) as well as commercial and institutional electrical systems. While AQ-103LV is suitable for MV use, it is designed for LV switchgears and for motor control center applications in both new and retrofitted installations.

4 Device features

AQ-103LV is an arc flash protection device which can be applied to a variety of applications. It can be used on its own as a stand-alone device, or it can be a part of a more complex arc protection system by using binary inputs and outputs to connect multiple AQ 100 series devices together.

The following list presents the main features of the device:

- 92…265 V AC/DC auxiliary power supply or 18…72 V DC auxiliary power (optional)
- fourteen (14) arc flash point sensor channels, max. one (1) point sensors per channel
- one (1) fiber loop sensor channel or AQ-1000 arc quenching device control (optional)
- two (2) binary inputs with a nominal operation voltage of 24 V DC
- one (1) high-speed semiconductor output (HSO)
- four (4) trip relay outputs
- one (1) binary output (with internal 24 V DC power supply)
- one (1) system failure output (change-over)
- twenty-five (25) indication LEDs
- eight (8) DIP switches for logic configuration
- RS-485 connector for Modbus communication (optional)
- eight (8) DIP switches for Modbus configuration (optional)
- one (1) push button.

5 Connections

The figure below depicts the connections of AQ-103(LV). Please note that the SF relay is in the de-energized position; also note that the device has been halved for the image to allow for space for all connector explanations.

Figure. 5 - 2. Rear terminals of the AQ-103(LV) with optional Modbus add-on.

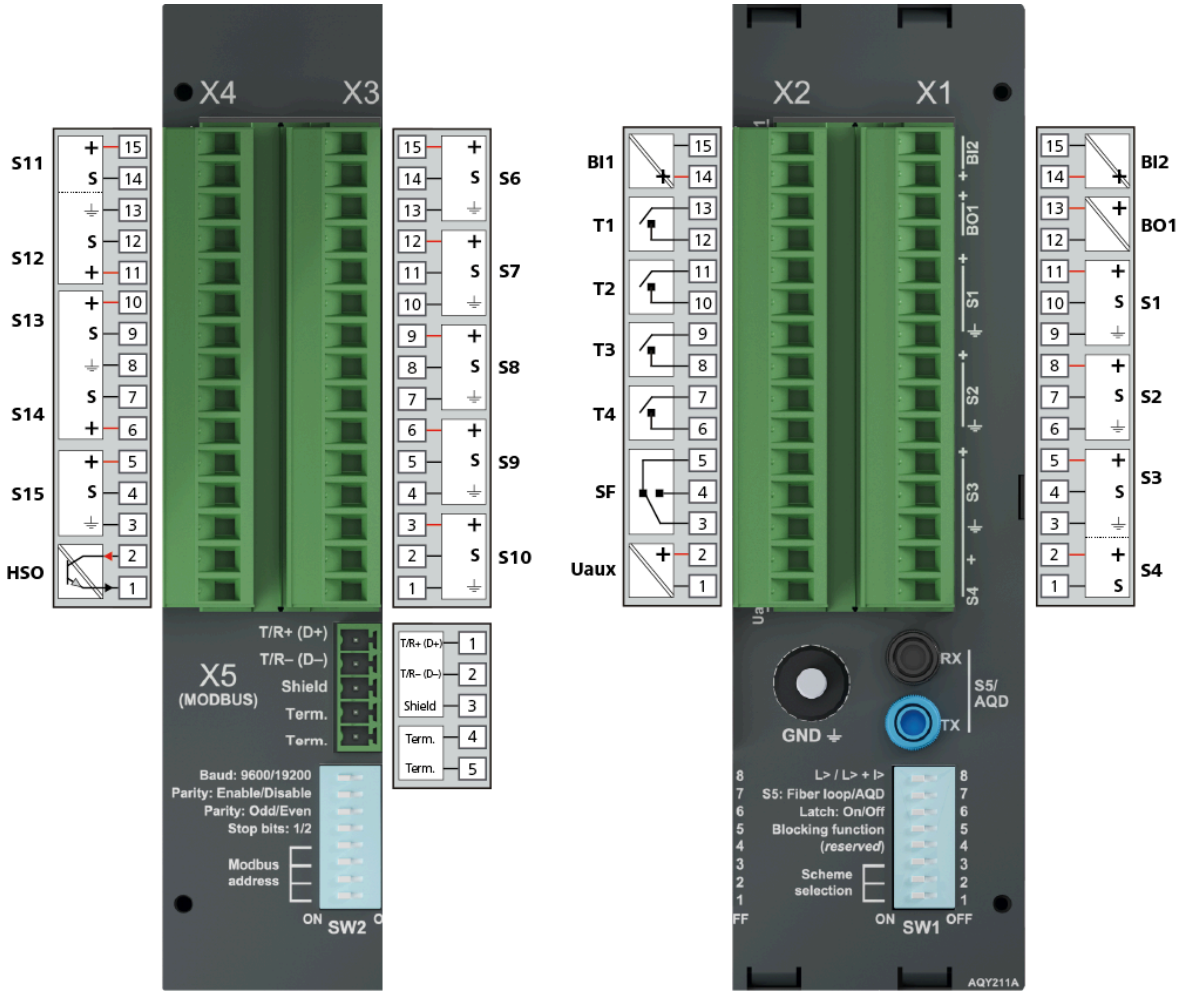

5.1 Simplified block diagram

The figure below presents the main components of the AQ-103LV device.

Figure. 5.1 - 3. Simplified block diagram of the AQ-103 with optional Modbus add-on.

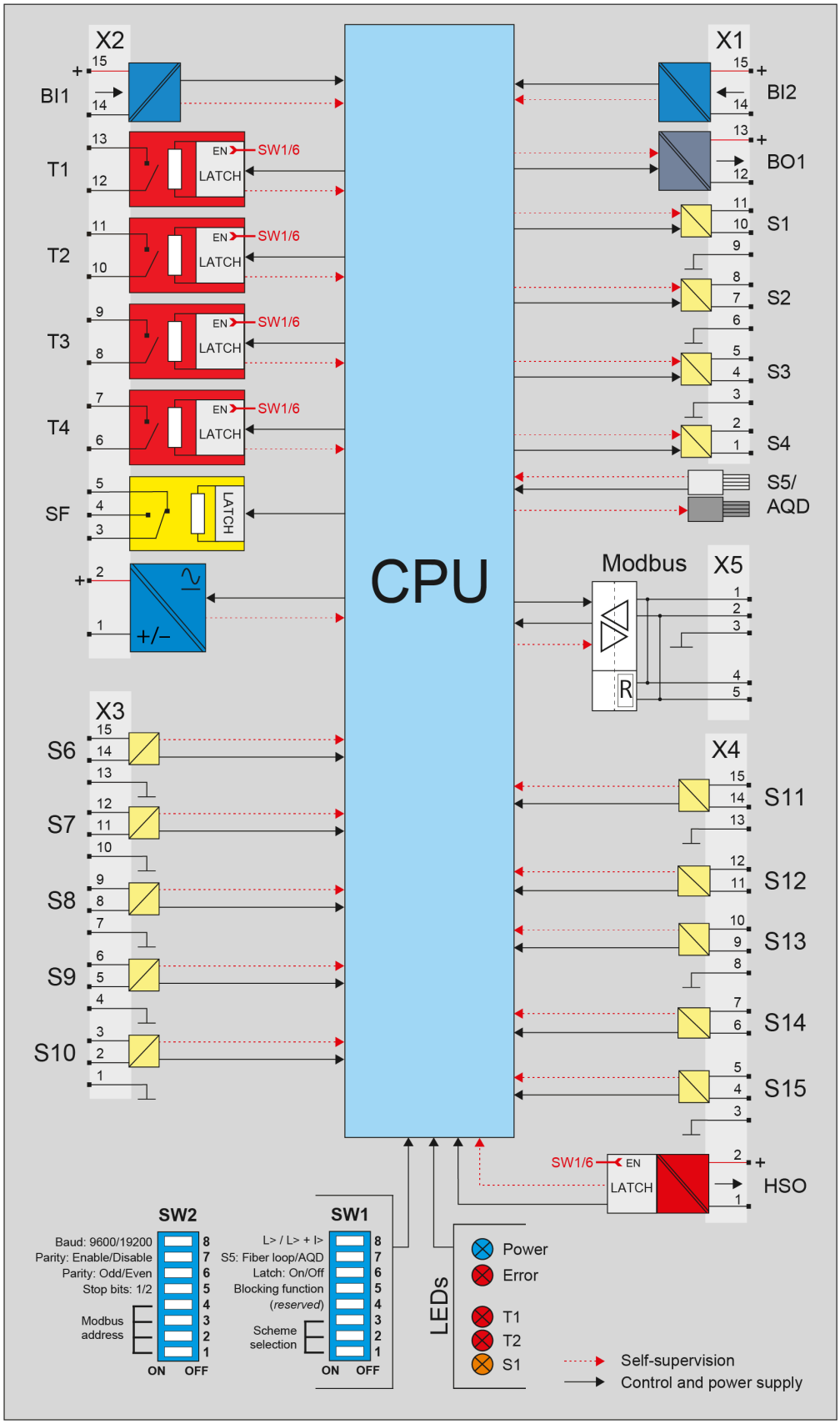

5.2 Inputs

5.2.1 Arc sensor channels

Figure. 5.2.1 - 4. Arc point sensor connections

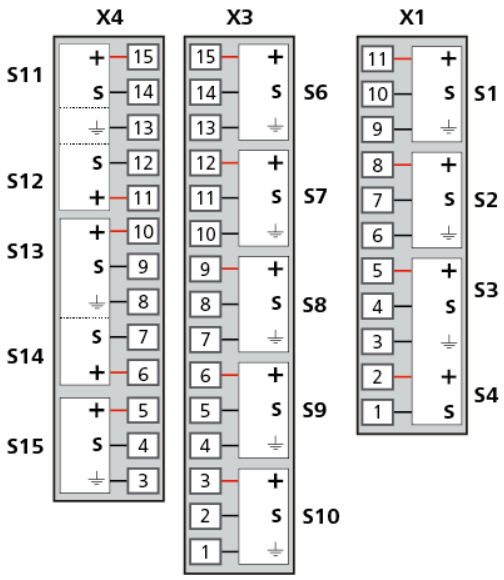

The device has fourteen (14) arc point sensor channels: S1... S4 and S6...S15. You can connect a one (1) arc point sensors to each channel. When the arc protection system has been set up, point sensor connections are constantly monitored. In case of sensor fault or disconnection, the device will go into Error mode. See System self-supervision chapter for more information.

Figure. 5.2.1 - 5. Optional fiber loop channel connection

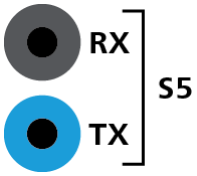

S5 is the optional fiber loop sensor channel with a transmitter (Tx) terminal and a receiver (Rx) terminal. The function of S5 is controlled with the DIP switches (please refer to the DIP switch settings chapter for more information). When S5 is configured as a fiber loop sensor channel, one of its ends is connected to "Tx" and the other to "Rx". This sensor loop is then continuously monitored by a test light pulse that travels through the loop. If a discontinuity is detected, the device goes into Error mode. See System self-supervision chapter for more information.

Alternatively, S5 can be configured to control the arc quenching device (AQD). Device sends a test pulse continuously to the arc quenching device to supervise the fiber connection. If the arc quenching device doesn't receive the test pulses the device will go into Error mode.

For more information on sensors, please refer to the Arc sensors chapter as well as to the AQ-0x instruction booklet which can be found on Arcteq's website (https://www.arcteq.fi/downloads/). For more information on AQ-1000 arc quenching device (AQD) please refer to the AQ-1000 Instruction manual.

5.2.2 Binary inputs

Figure. 5.2.2 - 6. Binary input connections

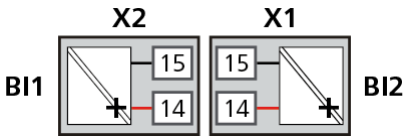

This device contains two (2) binary inputs. Typically, the binary inputs are used for receiving arc light signals, master trip commands or overcurrent signals. Function of binary inputs are configured using DIP switches. For more information, please refer to the DIP switch settings chapter.

Please note that when this device receives an overcurrent signal from a non-AQ 100 series device, the actual operating time depends on the operating time of the that device. Therefore, the total operating time cannot be specified in the technical data.

The binary inputs are activated when a connected DC signal reaches the specified nominal voltage level of the corresponding input. The nominal voltage level for this device is 24 VDC. Please note that the actual activation threshold of the binary input is at a lower voltage than the specified nominal voltage value (see Techical Data chapter).

AQ 100 series devices monitor health of wiring between binary inputs and binary outputs. If binary input loses connection to any of the configured binary outputs, the device will go into Error mode. See System self-supervision chapter for more information.

5.3 Outputs

5.3.1 Binary outputs

Figure. 5.3.1 - 7. Binary output connection

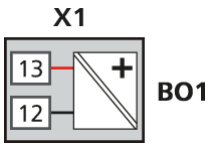

The device has one (1) binary output: BO1. AQ 100 series binary outputs have an internal 24 VDC power supply. This binary output is used for sending overcurrent, light detection, master trip and other signals to other AQ 100 series devices in the same system. The binary output function can be configured with the DIP switches. For more information on the configuration, please refer to the DIP switch settings chapter.

AQ 100 series device's binary outputs send out a short pulse every second. Binary inputs of the receiving AQ 100 series devices use these pulses to count the number of connected binary outputs. See System self-supervision chapter for more information.

NOTE!

Please note that the binary ouputs are polarity-sensitive.

5.3.2 High-speed output(s)

The device contains one (1) high-speed semiconductor output, abbreviated HSO. The output's direction of rotation is as follows: the signal goes in the even pin and out from the odd pin (see the image below, as detailed in the device's side sticker).

Figure. 5.3.2 - 8. The high-speed output's direction of rotation.

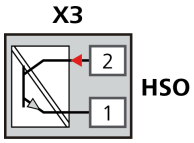

HSO can be used either for direct tripping of a circuit breaker, or as a heavy-duty signaling output. Due to its high current-carrying capacity, HSO can send overcurrent or light information to a maximum of twenty (20) pieces of AQ 100 series devices without a need for signal amplifiers. The operation of the high-speed output depends on the DIP switch settings (for more information, please refer to the DIP switch settingschapter).

NOTE!

The high-speed output is polarity-sensitive.

5.3.3 Trip relays

Figure. 5.3.3 - 9. Trip relay connections

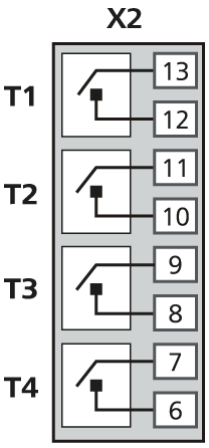

This device has four (4) normally open trip relay outputs. Trip relays T1 and T2 are used for tripping circuit breakers. T4 is generally used for tripping one additional disconnecting device, or as a trip alarm (local or remote) monitoring and alarming system.

T3 can alternatively be ordered as a normally closed trip relay (electronic lock-out relay). Once opened by fault detection it holds its open position until it receives a manual reset command or until auxiliary power supply is lost. When re-applying the auxiliary power supply, the electronic lock-out relay returns to the same contact condition it had prior to the power loss. This normally closed relay output can also be used for tripping contactor-controlled devices.

Trip relays can be set as latching relays by setting DIP switch SW1:6 ("Latching / Non-latching") to "Latching" position. Latched relays can be reset by pressing the "SET" button.

5.3.4 System failure relay

Figure. 5.3.4 - 10. System failure relay connection (de-energized position)

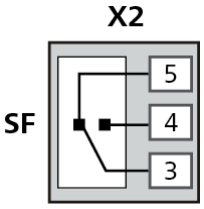

The system failure (SF) relay is of the change-over type (NO/NC) and it is energized when the device is in a healthy condition and powered on. Whenever the device detects a system error or the auxiliary power supply is disconnected, the SF relay changes its state. The state stays this way until the device returns to a healthy condition. See the System self-supervision chapter for more information.

5.4 Auxiliary voltage

Figure. 5.4 - 11. Auxiliary power supply connection

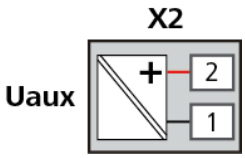

The auxiliary power supply voltage is 92….265 V AC/DC. Alternatively, the optional auxiliary power supply can be of 18…72 V DC. This choice must be specified when ordering.

6 Arc sensors

The AQ 100 series provides arc light point sensors and arc light fiber optic loop sensors. These sensors can be used with different devices and different switchgear types according to specific application requirements.

Arc light point sensors are typically installed in metal-clad compartments, and they provide a quick and accurate location of the faulted area. Arc light fiber loop sensors typically cover a wider protected area with one fiber, when there is no need to pinpoint the exact location for a fault.

6.1 Arc light point sensor AQ-01

AQ-01 is an arc light point sensor with a light-sensitive photodiode element activated by arc light. The AQ-01 sensors should be mounted in the switchgear cubicles in such a way that the light-sensitive part covers the protected area as completely as possible. While multiple sensors can be installed, in most cases one sensor per closed metal-clad compartment is sufficient. In open spaces (such as a busbar section) the sensors should be mounted no more than two meters apart.

The default light intensity threshold for an AQ-01 sensor is 8,000 lux. Depending on the demand of the application, light point sensors can be ordered with 25,000 lux or 50,000 lux thresholds. Its detection radius is 180 degrees.

Figure. 6.1 - 12. The AQ-01 light sensor.

An AQ-01 is installed either inside or outside the compartment wall. When mounting inside the wall, the sensor is placed on the wall with the colored side against the wall and then fixed to the wall with two screws. When mounting outside the wall the sensor is placed on the wall with the grey side against the wall and the eye is pushed into the drilled compartment hole and then fixed to the wall with two screws from the back of the sensor. No external mounting plates are needed regardless of the mounting type; however, mounting brackets can be used if so desired.

Up to three (3) sensors can be connected in series (with the exception of AQ-103 which can take only one point sensor per channel). Installing a connection cable is simple as each end of the sensor has a detachable cover over the cable connectors. Please remember to reattach the cover once the wires have been installed.

NOTE!

The AQ-01 point sensor does <u>not</u> come with a connection cable!

6.2 Arc light and pressure point sensor AQ-02

AQ-02 is an arc light and pressure point sensor that comes with arc light detection and ambient pressure detection. AQ-02 point sensor activates when both light and pressure are detected. The AQ-02 sensors should be mounted in the switchgear cubicles in such a way that the light-sensitive part covers the protected area as completely as possible. While multiple sensors can be installed, in most cases one sensor per closed metal-clad compartment is sufficient. The AQ-02 sensors cannot be installed in open spaces.

The default light intensity threshold for an AQ-02 sensor is 8,000 lux. Depending on the demand of the application, AQ-02 can also be ordered with 25,000 lux or 50,000 lux thresholds. Its detection radius is 180 degrees. The pressure threshold is fixed at 0.2 bar above ambient pressure.

Figure. 6.2 - 13. AQ-02 arc light and pressure point sensor.

An AQ-02 can only be installed inside the compartment wall as not to block pressure detection located next to "the eye". The sensor is placed on the wall (with the colored side against the wall), and then fixed to the wall with two screws. No external mounting plates are needed regardless of the mounting type; however, mounting brackets can be used if so desired.

Up to three (3) sensors can be connected in series (with the exception of AQ-103 which can take only one point sensor per channel). Installing a connection cable is simple as each end of the sensor has a detachable cover over the cable connectors. Please remember to reattach the cover once the wires have been installed.

NOTE!

The AQ-02 point sensor does not come with a connection cable!

6.3 Arc light fiber optic loop sensor AQ-06

AQ-06 is an arc light fiber optic loop sensor, which is a plastic fiber optic cable. Fiber sensors are distributed through the protected switchgear cells. The fixed light intensity threshold of an AQ-06 sensor is 8,000 lux. The sensor's detection radius is 360 degrees.

AQ-06 sensors can be ordered in pre-manufactured lengths of 3…40 meters (3 m, 5 m, 10 m, 15 m, 20 m, 25 m, 30 m, 35 m, 40 m).

6.4 Arc light fiber optic loop sensor AQ-07

AQ-07 is an arc light fiber optic loop sensor, which is a robust fiber optic cable with a practically unlimited bending radius. The sensor contains hundreds of glass fiber drains covered by a plastic tube, thus making it extremely strong and durable. Fiber sensors are distributed through the protected switchgear cells.

AQ-07 sensors can be ordered in pre-manufactured lengths of 3…50 meters (3 m, 5 m, 10 m, 15 m, 20 m, 25 m, 30 m, 35 m, 40 m, 45 m, 50 m).

The fixed light intensity threshold of an AQ-07 sensor is 8,000 lux. The sensor's detection radius is 360 degrees.

If necessary, the ends of an AQ-07 cable can be ordered with heat shrinking tubing to avoid light detection outside the protected zone. The covered area can be one (1) or two (2) meters by default; if other lengths are required, please consult the Arcteq sales team. You can find the Contact and reference information page at the end of this manual.

6.5 Arc light fiber optic loop sensor AQ-08

AQ-08 is an arc light fiber optic loop sensor. It is designed to withstand temperatures up to 125 ºC, which makes it suitable for e.g. wind turbine windings. AQ-08 is a robust fiber optic cable with a practically unlimited bending radius. The sensor contains hundreds of glass fiber drains that are covered by a plastic tube, thus making it extremely strong and durable. Fiber sensors are distributed through the protected switchgear cells.

AQ-08 sensors can be ordered in pre-manufactured lengths of 3…15 meters (3 m, 5 m, 10 m, 15 m).

The fixed light intensity threshold of an AQ-08 sensor is 8,000 lux. The sensor's detection radius is 360 degrees.

6.6 Sensor dependencies

Compatibility of arc sensor types depend on the hardware available in the AQ 100 series device. The table below describes those dependencies.

Table. 6.6 - 2. Sensor dependencies.

	Point sensors (AQ-01 & AQ-02)	Fiber loops (AQ-06, AQ-07 & AQ-08)
AQ-101LV	Yes	Order option
AQ-101DLV	Yes	Order option
AQ-102LV	No	Yes
AQ-103LV	Yes	Order option
AQ-110PLV	Yes	Order option
AQ-110FLV	No	Yes

6.7 Connecting sensors

6.7.1 Point sensors

Figure. 6.7.1 - 14. Wiring diagram of point sensors.

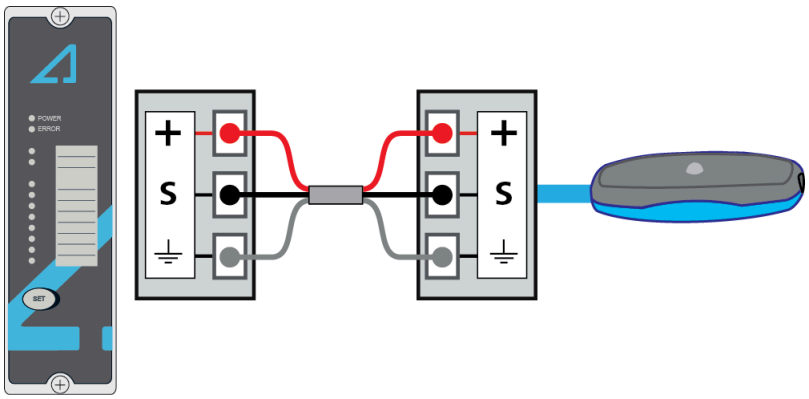

1. Open the sensor covers and detach the connectors.
2. Attach the cable to the connector and to the arc protection device.
3. Reattach the connectors to the sensor.
4. Run the auto-configuration procedure. See System setup for more details.

6.7.2 Fiber loop sensors

1. Drill holes on the wall for the sensor cable to enter the protected compartment.
2. Install protective covers in the holes to ensure the sensor cable remains unharmed by rough edges.

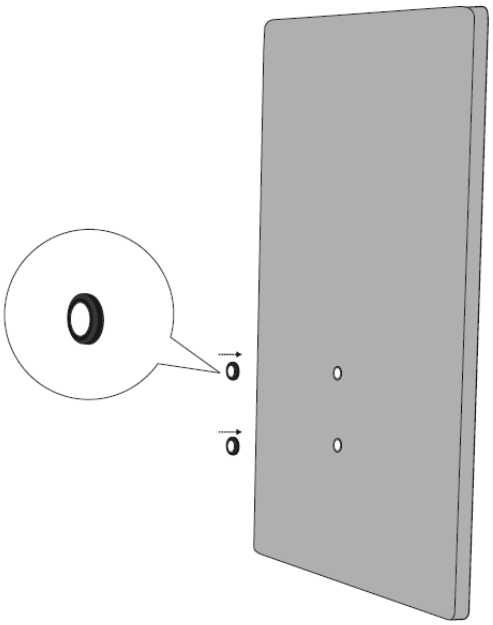

3. Run the sensor cable through the holes and along the protected area. Fasten it to the compartment walls with cable clips or some other appropriate anchoring method.

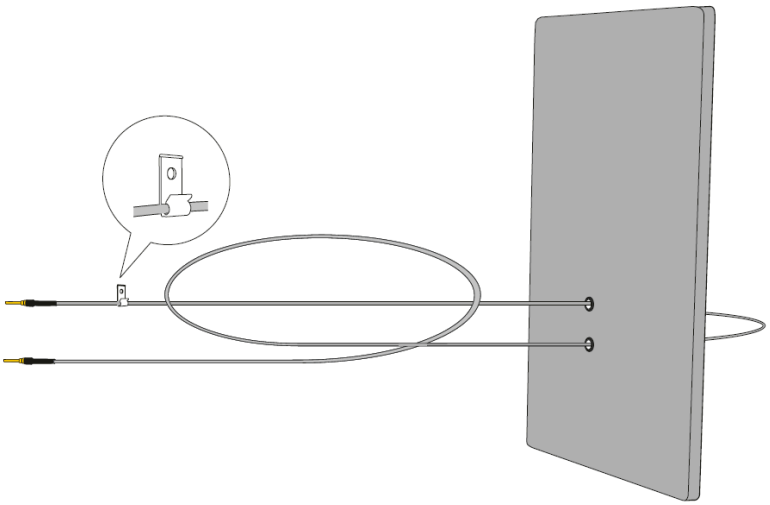

4. Turn the black and blue receiver (“Rx”) and transceiver (“Tx”) screws counter-clockwise and plug in the sensor cable terminals. Then turn the screws clockwise to secure the terminals in their place.

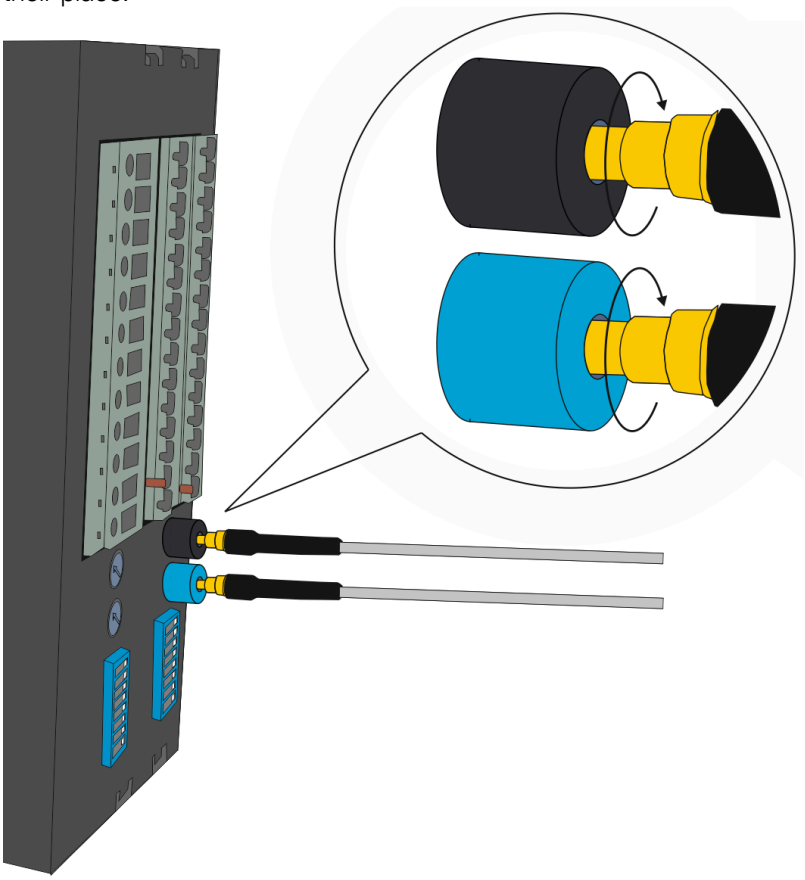

7 Operation and configuration

7.1 DIP switch settings

The DIP switches are used to easily configure various tripping logics and other functionalities for the device. The basic variant only contains one DIP switch group (SW1), while the Modbus variant also has a second DIP switch group (SW2). You can find the DIP switch(es) at the back of the device. The figure below presents the two DIP switches, and the table below them gives a detailed description of the settings for both switch groups.

Protection logic can be defined by selecting a logic scheme with DIP switches SW1:1 to SW1:3. The scheme selection is based on binary arithmetic. Logic schemes are described in the next chapter.

Tripping can be set with DIP switches SW1:7 and SW1:8 to require either just arc light or both arc light and overcurrent simultaneously. Adding overcurrent criteria ensures the device trips when an arc fault occurs but not when a strong natural light source hits the light sensor (e.g. sunlight). Overcurrent signal comes from an external device (AQ-110P, AQ-110F or other) and is connected to a binary input.

The Modbus address is selected with switches 1 through 4 of the SW2 DIP switch. The address always begins with 20. For example, when Pin 1 is in the left position (ON), the address is “21”. When switch 4 is ON, the address is “28”.

Figure. 7.1 - 15. DIP switch diagrams.

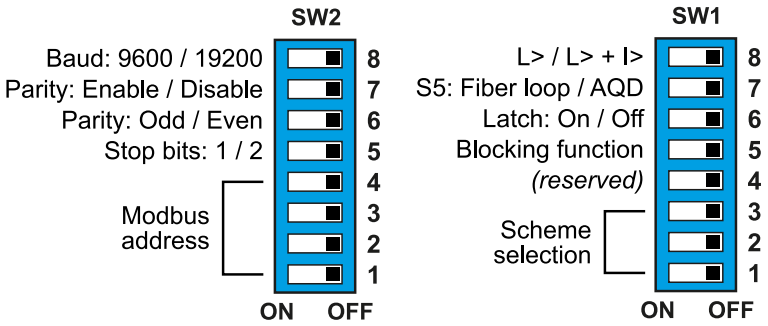

Table. 7.1 - 3. DIP switch settings for SW1 group.

Switch		Function selection	ON (left position)	OFF (right position)
8	L> or L> + I>	Selects the tripping criteria used by all point sensor and fiber loop channels.	Tripping on light only (L>).	Light detection only trips if overcurrent is also detected at the same time (L> + I>)
7	S5: Fiber loop or AQD	Selects how the fiber channel S5 is used.	The channel operates as the fiber loop sensor function.	The channel operates as the arc quenching system control. The Tx terminal of S5 sends a test pulse signal to the quenching system.
6	Latch: On or Off	Enables or disables latching of trip relays and high-speed output.	The trip relays (T1–T4) and high-speed output operate as latching outputs.	The trip relays and high-speed output latching is disabled.
5	Blocking function	Selects whether the outputs (T1–T4, HSO, BO1 and AQD) are blocked.	The outputs (T1–T4, HSO, BO1 and AQD) are blocked.	Normal operation.
4	*reserved*	*(Reserved for future use.)*	—	—

Switch		Function selection	ON (left position)	OFF (right position)
3–1	Scheme selection	Selects the logic scheme.	Please refer to the Scheme selection chapter. Switch 1: 1 Switch 2: 2 Switch 3: 4	Please refer to the Scheme selection chapter. Switch 1: 0 Switch 2: 0 Switch 3: 0

Table. 7.1 - 4. DIP switch settings for SW2 group.

Switch		Function selection	ON (left position)	OFF (right position)
8	Baud: 9600 or 19200	Selects the baud rate used by Modbus.	The baud rate is 9600.	The baud rate is 19200.
7	Parity: Enable or Disable	Selects whether the parity bit is enabled or not.	The parity bit is enabled.	The parity bit is disabled.
6	Parity: Odd or Even	Selects whether the parity makes the string's total number odd or even.	The total number is odd.	The total number is even.
5	Stop bits: 1 or 2	Selects the number of stop bits used to indicate the end of data transmission.	One (1) stop bit is used.	Two (2) stop bits are used.
4–1	Modbus address	Defines the Modbus address.	Switch 1: 1 Switch 2: 2 Switch 3: 4 Switch 4: 8	Switch 1: 0 Switch 2: 0 Switch 3: 0 Switch 4: 0

7.1.1 Scheme selection

This chapter describes the schemes available for both AQ-103 and AQ-103LV. The schemes are configured using the first DIP switch group (SW1) and its switches 1…3 ("Scheme selection"). The scheme selection is based on binary arithmetic:

- Switch 1: 1
- Switch 2: 2
- Switch 3: 4

Figure. 7.1.1 - 16. DIP switches used for selecting the logic scheme.

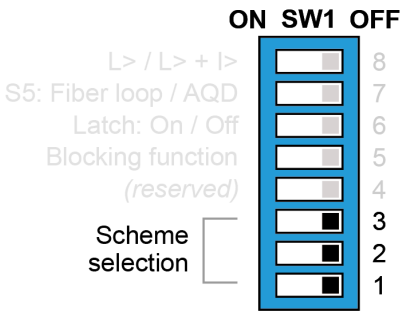

AQ 100 series arc protection devices can be used as a stand-alone device or as a part of a more complex arc portection system with multiple AQ 100 series devices. The most convenient way to set the device to a more complex arc protection system is to use Standard Arc Schemes (SAS). For detailed instructions on each of the available Standard Arc Schemes please refer to the AQ-SAS™ booklet (can be found at arcteq.fi/downloads/).

7.1.2 Available logic schemes

Below you can see descriptions of the most commonly used logic schemes available to the AQ-103LV device. The basic logic is the same in all the logic schemes:

- Binary input BI1 is an overcurrent signal coming from an external device (usually another AQ 100 series device).
- Binary input BI2 is external light signal coming from an external device (usually another AQ 100 series device).
- Binary output BO1 is activated by light signals (S1-S15 and BI2).
- Activation of trip relays (T1–T4) and in most logic schemes high speed output (HSO) are activated by light sensor channels (S1-S15 and BI2). Trip logic can be set to require simultaneous overcurrent detection (BI1) with DIP switch SW1:8.
- Arc quenching device (AQD) control signal is activated when light and overcurrent are detected simultaneously.

SS:0 (main)

All sensor channels trip all trip relays (T1–T4) as well as the high-speed output (HSO), the binary output (BO1) and the AQD control. When the blocking function is selected, it prevents all tripping activations apart from LED activations.

Figure. 7.1.2 - 17. The trip logic matrix of SS:0.

SS:0		OUTPUTS						
		T1	T2	T3	T4	BO1	HSO	AQD
INPUTS	S1	x[1]	x[1]	x[1]	x[1]	x	x[1]	x[2]
	S2	x[1]	x[1]	x[1]	x[1]	x	x[1]	x[2]
	S3	x[1]	x[1]	x[1]	x[1]	x	x[1]	x[2]
	S4	x[1]	x[1]	x[1]	x[1]	x	x[1]	x[2]
	S5	x[1]	x[1]	x[1]	x[1]	x	x[1]	
	S6	x[1]	x[1]	x[1]	x[1]	x	x[1]	x[2]
	S7	x[1]	x[1]	x[1]	x[1]	x	x[1]	x[2]
	S8	x[1]	x[1]	x[1]	x[1]	x	x[1]	x[2]
	S9	x[1]	x[1]	x[1]	x[1]	x	x[1]	x[2]
	S10	x[1]	x[1]	x[1]	x[1]	x	x[1]	x[2]
	S11	x[1]	x[1]	x[1]	x[1]	x	x[1]	x[2]
	S12	x[1]	x[1]	x[1]	x[1]	x	x[1]	x[2]
	S13	x[1]	x[1]	x[1]	x[1]	x	x[1]	x[2]
	S14	x[1]	x[1]	x[1]	x[1]	x	x[1]	x[2]
	S15	x[1]	x[1]	x[1]	x[1]	x	x[1]	x[2]
	Lext> (BI2)	x[1]	x[1]	x[1]	x[1]	x	x[1]	x[2]

1) Activates only if DIP-switch has been set to light only mode or if overcurrent signal (BI1) is ON.
2) Activates only if overcurrent signal (BI1) is ON.

Figure. 7.1.2 - 18. Simplified logic diagram of SS:0.

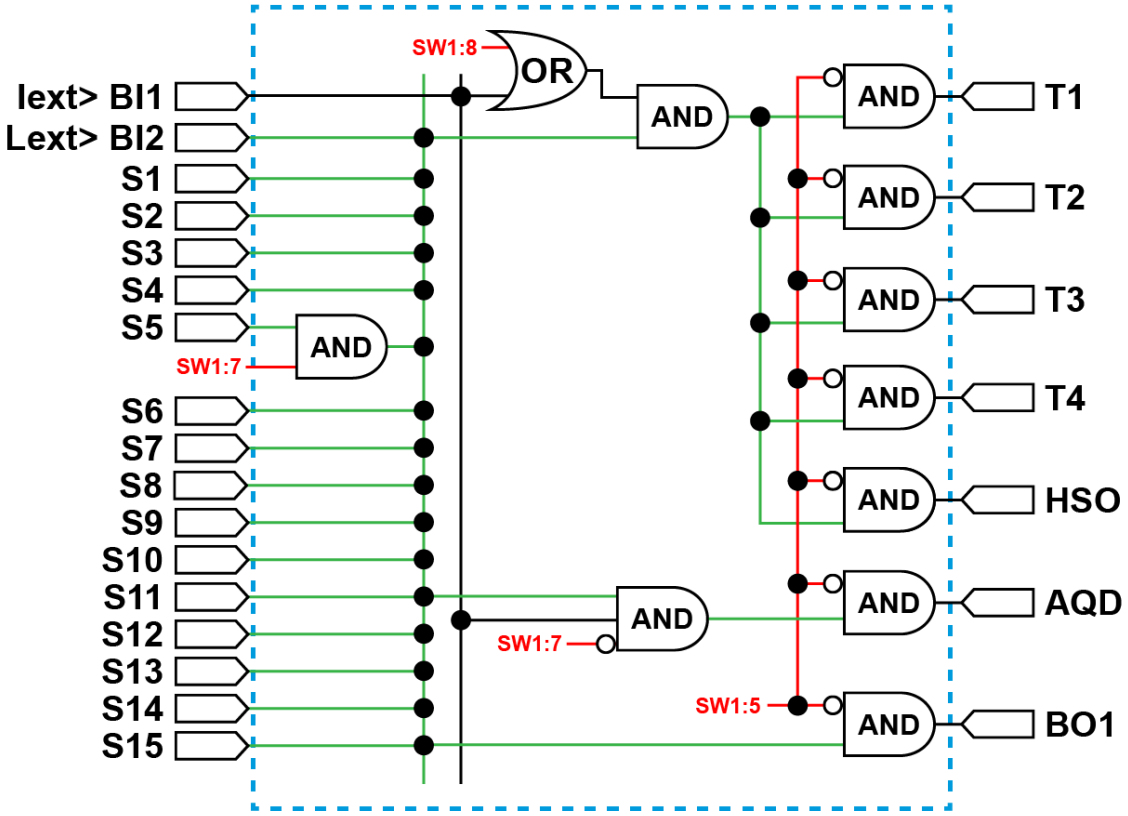

SS:1 (main)

The sensor channels S1 and S2 do not activate the AQD control. All sensors trip all trip relays (T1–T4) as well as the high-speed output (HSO) and the binary output (BO1). When the blocking function is selected, it prevents all tripping activations apart from LED activations.

Figure. 7.1.2 - 19. The trip logic matrix of SS:1.

SS:1		OUTPUTS						
		T1	T2	T3	T4	BO1	HSO	AQD
INPUTS	S1	x[1]	x[1]				x[1]	
	S2	x[1]	x[1]				x[1]	
	S3	x[1]	x[1]			x	x[1]	x[2]
	S4	x[1]	x[1]	x[1]	x[1]	x	x[1]	x[2]
	S5	x[1]	x[1]	x[1]	x[1]	x	x[1]	
	S6	x[1]	x[1]	x[1]	x[1]	x	x[1]	x[2]
	S7	x[1]	x[1]	x[1]	x[1]	x	x[1]	x[2]
	S8	x[1]	x[1]	x[1]	x[1]	x	x[1]	x[2]
	S9	x[1]	x[1]	x[1]	x[1]	x	x[1]	x[2]
	S10	x[1]	x[1]	x[1]	x[1]	x	x[1]	x[2]
	S11	x[1]	x[1]	x[1]	x[1]	x	x[1]	x[2]
	S12	x[1]	x[1]	x[1]	x[1]	x	x[1]	x[2]
	S13	x[1]	x[1]	x[1]	x[1]	x	x[1]	x[2]
	S14	x[1]	x[1]	x[1]	x[1]	x	x[1]	x[2]
	S15	x[1]	x[1]	x[1]	x[1]	x	x[1]	x[2]
	Lext> (BI2)	x[1]	x[1]	x[1]	x[1]	x	x[1]	x[2]

1) Activates only if DIP-switch has been set to light only mode or if overcurrent signal (BI1) is ON.
2) Activates only if overcurrent signal (BI1) is ON.

Figure. 7.1.2 - 20. Simplified logic diagram of SS:1.

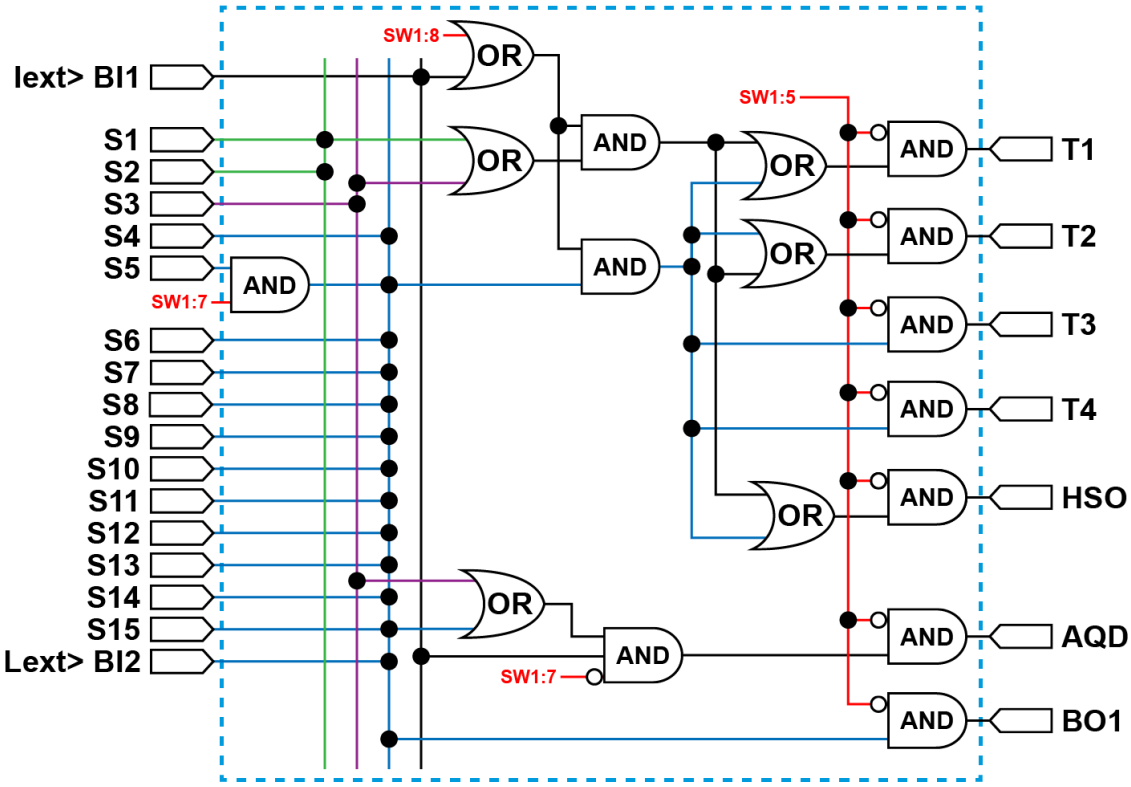

SS:2 (main–tie–main)

The sensor channels S1 and S2 do not activate the AQD control, but they do control the input (with T1) and the first circuit breaker (with T2). The sensor channel S14 always monitors the bus coupler circuit breaker and it controls the trip relays T1, T3, and T4 (which is the main input of the other side of the bus coupler circuit breaker). S14 also monitors the arc quenching device (AQD) control. The rest of the sensor channels control T1 and T3 as well as the AQD control. All sensor channels can also trip the high-speed output (HSO). When the blocking function is selected, it prevents all tripping activations apart from LED activations.

Figure. 7.1.2 - 21. The trip logic matrix of SS:2.

SS:2		OUTPUTS						
		T1	T2	T3	T4	BO1	HSO	AQD
INPUTS	S1	x[1]	x[1]			x	x[1]	
	S2	x[1]	x[1]			x	x[1]	
	S3	x[1]		x[1]		x	x[1]	x[2]
	S4	x[1]		x[1]		x	x[1]	x[2]
	S5	x[1]		x[1]		x	x[1]	
	S6	x[1]		x[1]		x	x[1]	x[2]
	S7	x[1]		x[1]		x	x[1]	x[2]
	S8	x[1]		x[1]		x	x[1]	x[2]
	S9	x[1]		x[1]		x	x[1]	x[2]
	S10	x[1]		x[1]		x	x[1]	x[2]
	S11	x[1]		x[1]		x	x[1]	x[2]
	S12	x[1]		x[1]		x	x[1]	x[2]
	S13	x[1]		x[1]		x	x[1]	x[2]
	S14	x[1]		x[1]	x[1]	x	x[1]	x[2]
	S15	x[1]		x[1]		x	x[1]	x[2]
	Lext> (BI2)	x[1]	x[1]	x[1]	x[1]	x	x[1]	x[2]

1) Activates only if DIP-switch has been set to light only mode or if overcurrent signal (BI1) is ON.
2) Activates only if overcurrent signal (BI1) is ON.

Figure. 7.1.2 - 22. Simplified logic diagram of SS:2.

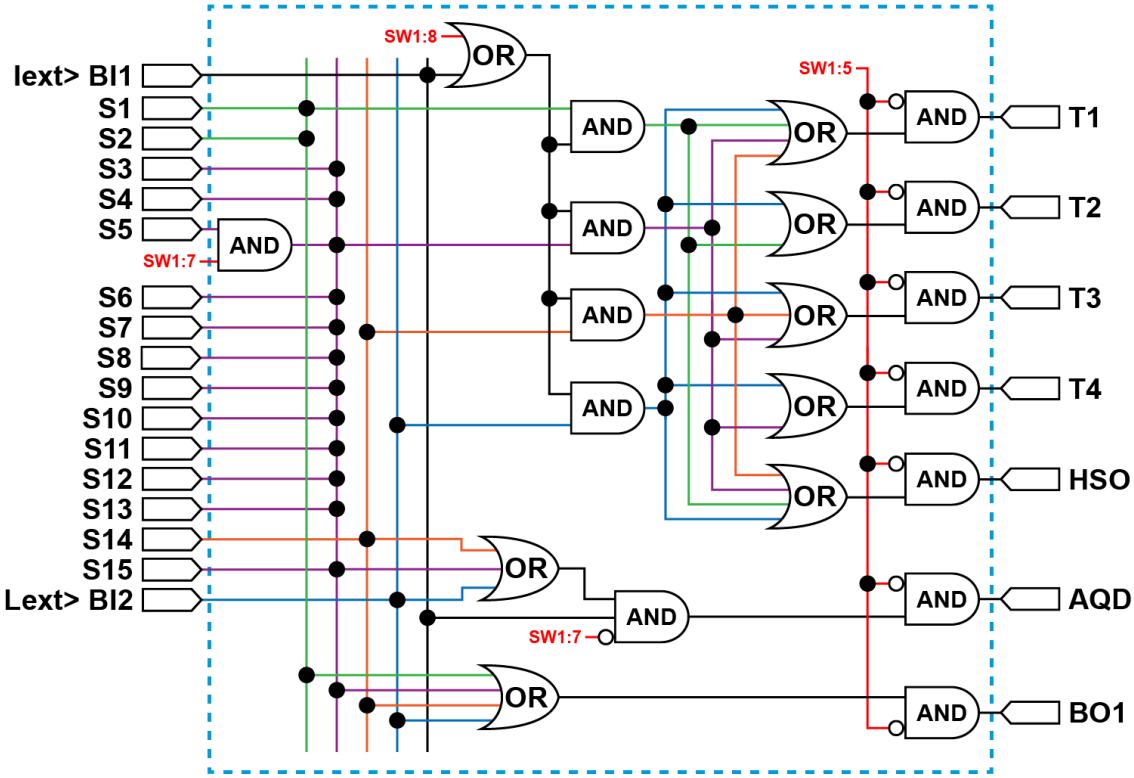

7.2 Push button (SET)

The device contains one push button, SET, and it can be used for all operational functions. The push button is used for:

1. Setting up the system (also known as auto-configuration)
2. Resetting the indicator LEDs
3. Resetting latched outputs
4. Checking the input connections

Figure. 7.2 - 23. The "SET" push button on the device's front panel.

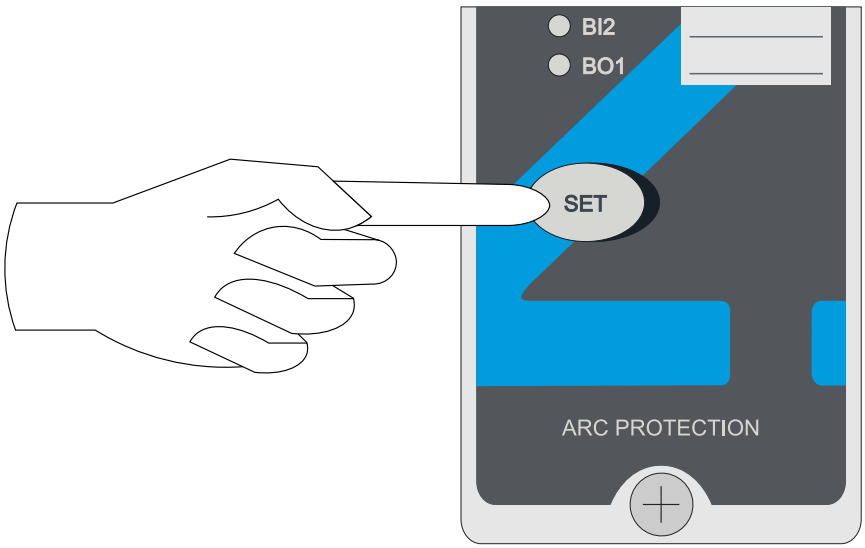

7.2.1 System setup (auto-configuration)

After DIP switches have been set to correct position and all sensors, binary inputs and binary outputs have been connected, a system setup procedure (also known as auto-configuration) must be performed. The sequence is initialized by pressing the SET push button for two seconds. This causes the sensor and binary I/O LEDs to start blinking. The device scans these inputs to see if they are connected; when an input is detected, the corresponding LED lights up to indicate that a connection was found. All inputs that are not connected continue to blink for three more seconds. Then, all LEDs are turned off. Additionally, the DIP switch setting are stored in the non-volatile memory after this sequence.

All arc sensors are operational even when they have not been auto-configured. System setup is only used for self-supervision purposes.

Please note that to reconfigure a device with fewer connections (BI/BO or arc sensors) than in the previously memorized setup, one of the DIP switches must be moved back and forth once before the system setup procedure is carried out. You can reconfigure a device with more connections at any time without having to move one of the DIP switches.

7.2.2 Reset

All LED indications and latched trip relays can be reset by pressing the SET push button.

7.2.3 Input connection check

After the system setup (auto-configuration) procedure is completed, you can verify the connectivity of all sensors and binary input channels by pressing the SET push button three (3) times within two (2) seconds. The LEDs of the corresponding sensors, binary input channels and the “Power” LED start blinking. The LEDs blink as many times as there are connected sensors and binary output channels from other devices.

7.3 LED indicator functions

The AQ-103LV device has twenty-five (25) indication LEDs on the device's front panel.. Apart from the “Power” and “Error” LEDs, the user can write their own identifications for each of the remaining LEDs on the text insert sheet located in the transparent pockets next to the LEDs.

When the device is powered up, it performs an LED test. All LEDs turn on for two (2) seconds and then turn off; only the blue "Power" LED stays on.

When the device operates normally, only the blue "Power" LED is lit.

If an arc sensor is activated, its corresponding LED turns on. Activated arc sensor LEDs will stay on until user has reset them with "SET" push button.

If there is a loose sensor wire or if the self-supervision function detects a configuration mismatch (that is, a new sensor has been attached but the auto-configuration system setup has not been run), the corresponding LED starts flashing and the "Error" LED activates.

The binary I/O LEDs indicate the status of the input and output lines. If any of the lines become active, the corresponding LED turns on. All light channel and trip indication LEDs are latched, even if the DIP switch settings are in the non-latched mode.

All LED indications are stored in the non-volatile memory (EPROM) to help identify the necessary trip information even after auxiliary power is lost. When the device is re-powered after a power supply loss, the front panel shows the status of all LEDs.

You can clear the LEDs by pushing the SET button.

7.4 LED operations guide

The table below describes the function of each indicator LED in detail (includes both variants).

Table. 7.4 - 5. LED operations of AQ-103LV (both variants).

LED name (color)	Light off	Steady light	Blinking light	Action if abnormal
POWER (blue)	The auxiliary power supply is disconnected.	The auxiliary power supply is connected.	*(N/A)*	Check the power supply.
ERROR (red)	The system is healthy.	A system failure has occured.	A configuration mismatch has been detected. Protection is partially operational.	Verify the system condition (see the System self-supervision and Troubleshooting chapters).
T1–T4 (red)	Normal status.	The trip relay has activated.	*(N/A)*	Check what caused the trip, clear the fault, and reset the indicator LEDs with the push button.
S1–S4, S6–S15 (amber)	Normal status.	Light information has activated the sensor channel.	There is a sensor channel discontinuity, or a system setup has not been performed.	Check sensor continuity or perform a system setup (see the System setup (auto-configuration) chapter); or, check what activated the sensor.
S5 (amber) (optional)	Normal status.	Light information has activated the fiber sensor channel. Or, if the device has AQD control configured to this sensor channel, an arc flash has activated the channel.	There is a fiber sensor discontinuity, or a system setup has not been performed.	Check sensor continuity or perform a system setup (see the System setup (auto-configuration) chapter); or, check what activated the sensor.
BI1–BI2 (amber)	Normal status.	The binary input has been activated.	The binary input has a loose connection.	Check the binary input wiring.
BO1 (amber)	Normal status.	The binary output has been activated.	*(N/A)*	—
HSO (red)	Normal status.	The high-speed output has been activated.	*(N/A)*	Check the activated output, clear the fault, and reset the indicator LEDs with the push button.

7.5 Modbus communication

AQ-103 and AQ-103LV can be ordered with Modbus RTU serial communication to report various signals to external devices. It is mainly designed for connecting to AQ-S254 but any Modbus master can be used. Up to 16 AQ-103 or AQ-103LV devices can be connected to one system.

Modbus polling rate

The recommended maximum polling rate for the Modbus protocol is twice per second (2/s). The device also works with higher polling rates; however, unless there is a pressing reason to exceed the recommended rate, it is strongly advised to stay below the recommended maximum polling rate.

Modbus map

Table. 7.5 - 6. Modbus map (bits 9-16).

Register name	Reg. address	Bit 16	Bit 15	Bit 14	Bit 13	Bit 12	Bit 11	Bit 10	Bit 9
Installed sensors	0 (40001)	-	S15	S14	S13	S12	S11	S10	S9
Sensor activations	1 (40002)	-	S15	S14	S13	S12	S11	S10	S9
I/O activations	2 (40003)	-	-	-	-	-	-	AQD	HSO1
DIP switch settings	3 (40004)	SW2:8	SW2:7	SW2:6	SW2:5	SW2:4	SW2:3	SW2:2	SW2:1
Serial number	4-5 (40005)	SN32	SN31	SN30	SN29	SN28	SN27	SN26	SN25
		SN16	SN15	SN14	SN13	SN12	SN11	SN10	SN9
Latched sensor activations	6 (40007)	-	S15	S14	S13	S12	S11	S10	S9
Latched I/O activations	7 (40008)	-	-	-	-	-	-	AQD	HSO1
Clear latched signals	10 (40011)	-	-	-	-	-	-	-	-

Table. 7.5 - 7. Modbus map (bits 1-8).

Register name	Reg. address	Bit 8	Bit 7	Bit 6	Bit 5	Bit 4	Bit 3	Bit 2	Bit 1
Installed sensors	0 (40001)	S8	S7	S6	S5	S4	S3	S2	S1
Sensor activations	1 (40002)	S8	S7	S6	S5	S4	S3	S2	S1
I/O activations	2 (40003)	SF	T4	T3	T2	T1	BO1	BI2	BI1
DIP switch settings	3 (40004)	SW1:8	SW1:7	SW1:6	SW1:5	SW1:4	SW1:3	SW1:2	SW1:1
Serial number	4-5 (40005)	SN24	SN23	SN22	SN21	SN20	SN19	SN18	SN17
		SN8	SN7	SN6	SN5	SN4	SN3	SN2	SN1
Latched sensor activations	6 (40007)	S8	S7	S6	S5	S4	S3	S2	S1
Latched I/O activations	7 (40008)	SF	T4	T3	T2	T1	BO1	BI2	BI1
Clear latched signals	10 (40011)	-	-	-	-	-	-	-	-

7.6 Non-volatile memory

All critical system data (such as DIP switch settings and the system setup file) are stored in the non-volatile memory (EPROM) to ensure accurate operation and full self-supervision even if auxiliary power is lost temporarily.

Additionally, all LED indications are stored in the non-volatile memory to provide a quick recovery of the system status indication. This feature is especially important if tripping causes the device to lose its auxiliary power.

The non-volatile memory does not require a power supply to maintain the information and it retains the settings and the indications permanently without power.

8 System self-supervision

AQ 100 series devices have an extensive self-supervision function, including both internal functions and external connections. The self-supervision function monitors the following:

- power supply
- hardware
- software
- binary input connection(s)
- sensor connection(s)
- DIP switch settings

When the device's condition is healthy and is powered on, the "Power" LED is lit and the system failure (SF) relay is energized. If the self-supervision function detects a faulty condition or if the power supply fails, the SF relay is released and the "Error" LED becomes lit.

Point sensor connection monitoring

If a point sensor failure occurs, the device will go into Error mode. The "Error" LED turns on, the SF relay releases, and the LED of the corresponding faulty sensor channel starts blinking. In this situation the device is still operational, although the faulty sensor channel is blocked. If the error is resolved, the device automatically clears the system failure status, energizing the SF relay and turning off the "Error" LED. If one or more of the sensors are disconnected, the healthy sensors remain in use and the device remains operational accordingly. However, the device remains in Error mode until the sensors are connected again.

Fiber loop connection monitoring

Fiber loop channel(s) is monitored by a test light pulse that travels through the loop. If a discontinuity is detected, the "Error" LED turns on, the SF relay releases, and the LED of the corresponding faulty sensor channel starts blinking. If the error is resolved, the device automatically clears the system failure status, energizing the SF relay and turning off the "Error" LED. The device remains in Error mode until the sensors are connected again.

Binary input connection monitoring

During system setup (auto-configuration) AQ 100 series device checks how many AQ 100 device binary outputs have been connected to binary inputs. Each AQ 100 series device binary output constantly sends a short pulse every second which the receiving binary input uses to count the number of connected devices. If any of the binary outputs are disconnected after the system setup, the binary input will detect the mismatch and the device will go into Error mode and the binary input LED will blink. If the error is resolved, the device automatically clears the system failure status, energizing the SF relay and turning off the "Error" LED.

DIP switch setting monitoring

The device goes into Error mode, if a DIP switch setting is changed after the system setup procedure has been performed. However, the configured (stored) settings are still valid and the device is still operational.

9 Wiring example

Figure. 9 - 24. Example wiring diagram for AQ-103LV.

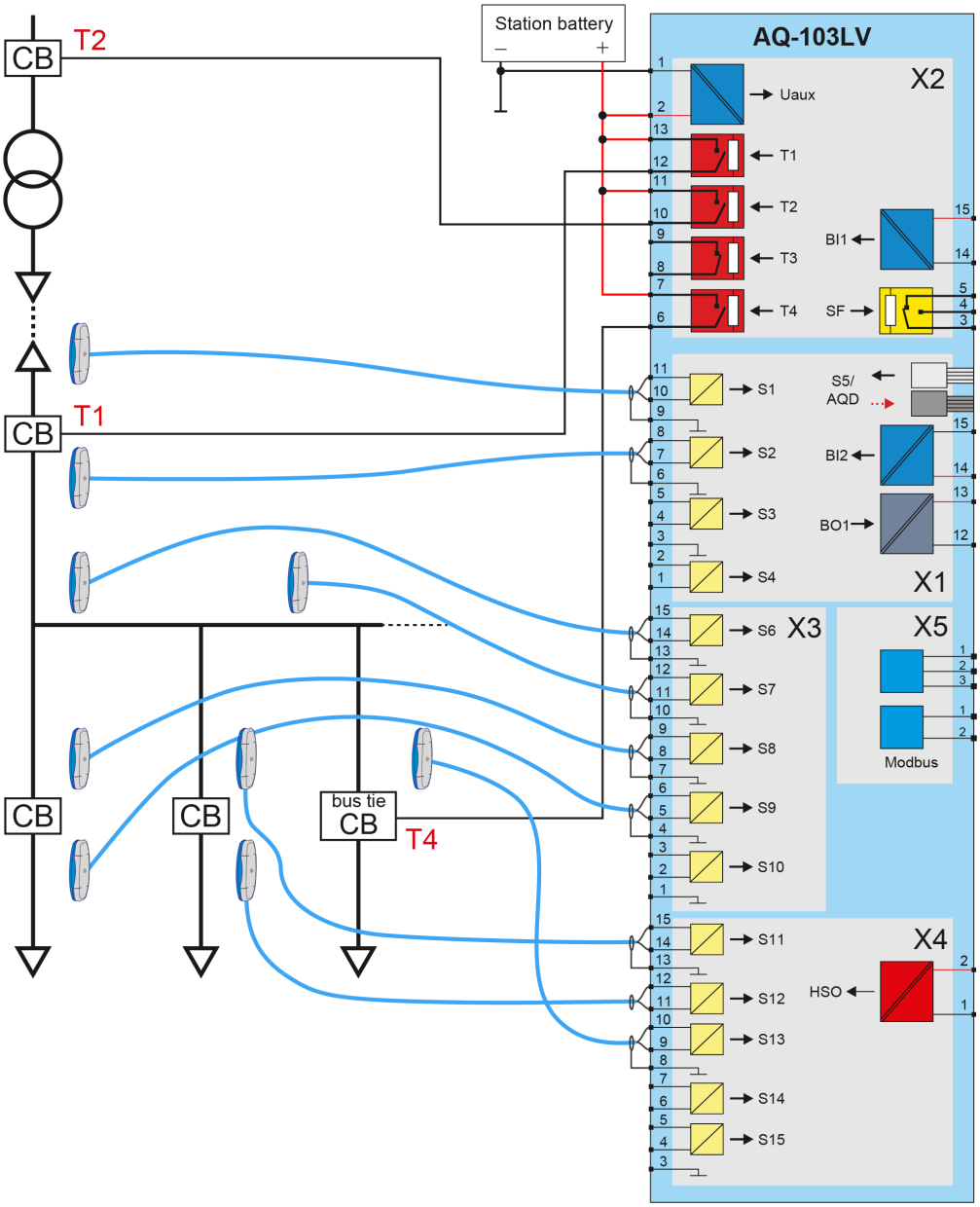

10 Dimensions and installation

AQ-103LV can be either door-mounted or panel-mounted in a standard 19 inch rack. The device's dimensions (without PCBs) are as follows:

- Height: 157 mm (6.18 in)
- Width: 102 mm (4.02 in)
- Depth: 160 mm (6.30 in).

The figure below presents the dimension of the device visually. It also shows the dimensions of the cut-out (bottom-left) required when mounting the device on a panel. While the image is of the AQ-110F device, the measurements are the same for AQ-103 and AQ-103LV.

Figure. 10 - 25. Dimensions of the device.

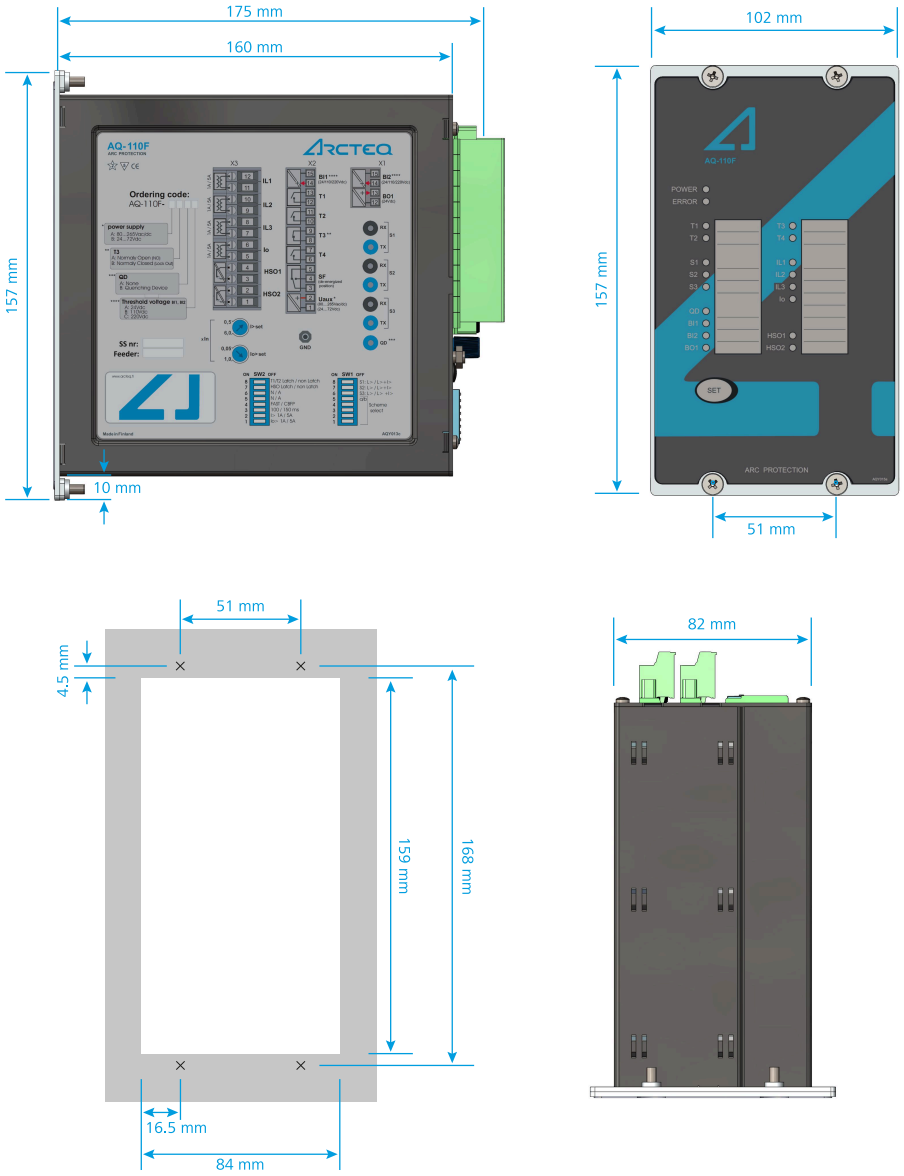

The following image illustrates how a device is installed into a cut-out:

Figure. 10 - 26. Installing a device into a cut-out.

11 Testing

It is recommended that the device is tested prior to substation energizing. Testing is carried out by simulating an arc light for each sensor and verifying that the correct trip contact(s) tripped and that the correct indicator LED(s) turned on.

Any strong camera flash works well to simulate arc light. Please note that small LED lights like smartphone flashes are not strong enough to activate a point sensor or a fiber loop. Having a self-timer helps with the testing process because it can be connected to the test kit. Any strong flashlight works to test non-latched signals and the CBFP function. Before testing please check that the equipment used has a fully charged battery.

11.1 Testing the light-only mode

1. Check that the DIP switch settings are positioned according to your application.
2. Activate the camera flash within 30 cm (12 inches) of the sensor that is being tested.
3. Verify that the indicator LED of the corresponding sensor channel is lit.
4. Verify the activation(s) of the relay output(s) by checking the circuit breaker's status, or by monitoring the trip contact's status. The circuit breaker should open, or the contacts operate. Please note that you achieve the best test results when you operate the circuit breaker while testing.
5. Verify that the indicator LED(s) of the corresponding relay output(s) is lit.
6. If you are using the BO1 binary output and/or one or both of the high-speed outputs, verify their signal activation either through the status change of the relevant input, or by measuring the signal output voltage. Please note that BO1 is of the non-latched type.
7. If you are using the BO1 binary output and/or one or both of the high-speed outputs, also verify that their corresponding LED is lit.
8. Press the SET push button to reset all indications and latches.
9. If you are using the BI2 binary input as the master trip, activate it and verify that the trip has occurred by repeating the steps 4 and 5.
10. Press the SET push button to reset all indications and latches.
11. Repeat the steps 1 through 10 for all sensors.

11.2 Testing the light and current mode

1. Check that the DIP switch settings are positioned according to your application.
2. Activate the following two things simultaneously: the camera flash within 30 cm (12 inches) of the sensor that is being tested, and the binary input used for the overcurrent condition (I>).
3. Verify that the indicator LED of the corresponding sensor channel is lit.
4. Verify that the indicator LED of the binary input is lit.
5. Verify the activation(s) of the relay output(s) by checking the circuit breaker's status, or by monitoring the trip contact's status. The circuit breaker should open, or the contacts operate. Please note that you achieve the best test results when you operate the circuit breaker while testing.
6. Verify that the indicator LED(s) of the corresponding relay output(s) is lit.
7. If you are using the BO1 binary output or a high-speed output (HSO1 and/or HSO2), verify the signal activation either through the status change of the relevant input, or by measuring the signal output voltage.
8. If you are using the binary output (BO1) or a high-speed output (HSO), also verify that the corresponding LED is lit. Please note that BO1 is of the non-latched type.
9. Activate the camera flash within 30 cm (12 inches) of the sensor but do not activate the binary input used for the overcurrent condition (I>).
10. Verify that no trip has occured and only the indicator LED of the sensor activation is lit.

11. If you are using the BO1 signal and have configured it to send light information, verify that it is activated.
12. Press the SET push button to reset all indications and latches.
13. If you are using a binary input as the master trip, activate it and verify that the trip has occurred by repeating the steps 5 and 6.
14. Press the SET push button to reset all indications and latches.
15. Repeat the steps 1 through 12 for all sensors.

11.3 Testing the operation time

An operation time test is not required at commissioning as it is performed by the manufacturer both as a type test and as a routine production test. If you want to have more information of these tests, please refer to the routine test reports sent with the AQ-103(LV) device and/or consult your nearest Arcteq representative for the type test reports.

However, if it is deemed necessary, you can conduct an on-site timing test with the following instructions.

1. Use a calibrated relay test set.
2. Connect one of the test set's outputs to a strong camera flash to initialize the flash and to configure the set's timer to start simultaneously with the flash.
3. Connect one of the AQ-110 device's trip outputs (T1, T2, T3, T4) or high-speed outputs (HSO [HSO1] ja HST [HSO2]) to a test set input and configure the input to stop the timer.
4. Place the camera flash within 30 cm (12 inches) of the sensor.
5. Initiate the flash and the timer by using the test set output.
6. Read the measured time between the simulated arc light and the operation of the trip contact.
7. Subtract the digital input delay of the test set from the final measured time (if applicable). For specific test instructions, please consult the manufacturer of the relay test set.

11.4 Test plan example

AQ-103(LV)

Basic data	
Date:	
Substation:	
Switchgear:	
Serial number:	

Preconditions		Additional notes
Trip mode (all channels):	___ L> ___ L> + I>	

Object activated		LED active	T1, T2, T3, T4, HSO1, AQD active	BO1 active	Additional notes
Sensor channel 1					
Sensor channel 2					
Sensor channel 3					
Sensor channel 4					
Sensor channel 5					
Sensor channel 6					
Sensor channel 7					
Sensor channel 8					
Sensor channel 9					
Sensor channel 10					
Sensor channel 11					
Sensor channel 12					
Sensor channel 13					
Sensor channel 14					
Sensor channel 15 **or** quenching device					
Binary inputs	BI1				
	BI2				

Involved personnel	
Tested by:	
Approved by:	

12 Troubleshooting

Table. 12 - 8. Troubleshooting guide for AQ-103 variants.

Problem	Possible solution(s)
The sensor does not activate during testing.	Check the sensor's cable wiring. or Check the testing equipment, especially the camera flash intensity (see the Testing chapter for more information).
The trip relay does not operate even when the sensor is activated.	Tripping might require overcurrent signal simultaneously with light signal. Check the DIP switch settings (see the DIP switch settings chapter for more information).
The system gives an alarm that cannot be cleared or installed.	Check that each sensor channel only has one sensor connected to it.

13 Technical data

13.1 Operating times

Table. 13.1 - 9. Technical data for relay operating times.

Trip time using HSO	2 ms
Trip time using mechanical trip relays	7 ms
Reset time (light stage)	1 ms

13.2 Auxiliary voltage

Table. 13.2 - 10. Technical data for the relay auxiliary voltage (Uaux).

Auxiliary power supply	92…265 V AC/DC 18…72 V DC (optional)
Maximum power consumption	5 W, < 10 mΩ
Standby current	90 mA
Start-up inrush current	<150 ms (110 V DC) <600 ms (24 V DC)

13.3 Binary inputs

Table. 13.3 - 11. Technical data for the binary inputs (BI1, BI2).

Nominal threshold voltage	24 V DC
Threshold: - pick-up - drip-off	 Approximately 16 V DC Approximately 15 V DC
Rated current	3 mA
Number of inputs	2

13.4 Trip relays

Table. 13.4 - 12. Technical data for the trip relays (T1, T2, T3, T4).

Number of trip relays	4 NO <u>or</u> 3 NO + 1 NC
Voltage withstand	250 V AC/DC
Carry: - continuous carry - make-and-carry for 3 s - make-and-carry for 0.5 s	 5 A 16 A 30 A
Breaking capacity DC*	40 W (0.36 A at 110 V DC)
Contact material	AgNi 90/10

*) When the time constant L/R = 40 ms.

13.5 High-speed output(s)

Table. 13.5 - 13. Technical data for the high-speed output (HSO).

Number of outputs	1
Rated voltage	250 V DC
Carry: - continuous carry - make-and-carry for 3 s - make-and-carry for 0.5 s	 2 A 6 A 15 A
Breaking capacity DC*	1 A/110 W
Contact material	semiconductor

*) When the time constant L/R = 40 ms.

13.6 Binary output(s)

Table. 13.6 - 14. Technical data for the binary output (BO1).

Number of outputs	1
Rated voltage	+24 V DC (internal power supply)
Rated current (max.)	20 mA

13.7 System failure relay

Table. 13.7 - 15. Technical data for the system failure relay (SF).

Number of SF relays	1
Rated voltage	250 V AC/DC
Carry: - continuous carry - make-and-carry for 3 s - make-and-carry for 0.5 s	 5 A 16 A 30 A
Breaking capacity DC*	40 W (0.36 A at 110 V DC)
Contact material	AgNi 90/10

*) When the time constant L/R = 40 ms.

13.8 Point sensors

AQ-01 point sensor

Table. 13.8 - 16. Technical data for the AQ-01 light point sensor.

Light intensity threshold	8,000 lux 25,000 lux 50,000 lux
Detection radius	180º
Mechanical protection	IP 20
Sensor cable specification	Shielded twisted pair 0.75 mm^2 (AWG: 18)
Maximum sensor cable length (per channel)	200 m
Operating temperature	–20…+85 ºC

AQ-02 point sensor

Table. 13.8 - 17. Technical data for the AQ-02 light and pressure point sensor.

Light intensity threshold	8,000 lux 25,000 lux 50,000 lux
Pressure threshold (fixed)	0.2 bar above ambient pressure
Pressure measuring accuracy	±1.8 % (of full scale)
Detection radius	180º
Mechanical protection	IP 20
Sensor cable specification	Shielded twisted pair 0.75 mm^2 (AWG: 18)
Maximum sensor cable length (per channel)	200 m
Operating temperature	–20…+85 ºC

13.9 Fiber optic loop sensors

AQ-06 fiber optic loop sensor

Table. 13.9 - 18. Technical data for the AQ-06 fiber optic loop sensor.

Material	Plastic fiber
Light intensity threshold	8,000 lux
Cable length (min…max)	3…40 m
Cable diameter	1.0 mm
Detection radius	360º
Bending radius	5 cm
Operating temperature	–40…+85 ºC

AQ-07 fiber optic loop sensor

Table. 13.9 - 19. Technical data for the AQ-07 fiber optic loop sensor.

Material	Covered glass fiber
Light intensity threshold	8,000 lux
Cable length (min…max)	3…50 m
Cable diameter	1.2 mm
Detection radius	360º
Bending radius	1 cm
Operating temperature	–40…+85 ºC

AQ-08 fiber optic loop sensor

Table. 13.9 - 20. Technical data for the AQ-08 fiber optic loop sensor.

Material	Covered glass fiber
Light intensity threshold	8,000 lux

Cable length (min…max)	3…15 m
Cable diameter	1.2 mm
Detection radius	360º
Bending radius	1 cm
Operating temperature	–40…+125 ºC

13.10 Disturbance tests

Table. 13.10 - 21. Technical data for the disturbance tests.

Electromagnetic compatibility test	CE-approved and tested according to EN 50081-2 and EN 50082-2
Conducted emission (EN 55011, class A)	0.15…30.00 Hz
Radiated emission (EN 55011, class A)	30.00…1,000.00 MHz
Electrostatic discharge immunity (IEC 244-222 and EN 61000-4-2, level 4)	Air discharge: 15 kV Contact discharge: 8 kV
Electrical fast transients (EN 61000-4-4, class III & IEC 801-4, level 4)	Power supply input: 4 kV, 5/50 ns Other inputs and outputs: 4 kV, 5/50 ns
Surge immunity (EN 61000-4-5, level 4)	Between wires: 2 kV, 1.2/50 µs Between wire and earth: 4 kV, 1.2/50 µs
RF electromagnetic field (EN 61000-4-3, level 3)	f = 80…1,000 MHz, 10 V/m
Conducted RF field (EN 61000-4-6, level 3)	f = 150 kHz…80 MHz, 10 V/m

13.11 Voltage tests

Table. 13.11 - 22. Technical data for the voltage tests.

Insulation test voltage (IEC 60255-5)	2 kV, 50 Hz, 1 min
Impulse test voltage (IEC 60255-5)	5 kV, 1.2/50 µs, 0.5 J

13.12 Mechanical tests

Table. 13.12 - 23. Technical data for the mechanical tests.

Vibration test	2…13.2 Hz (± 3.5 mm) 13.2…100 Hz (±1.0 g)
Shock/bump test (IEC 60255-21-2)	20 g and 1,000 bumps/dir.

13.13 Environmental conditions

Table. 13.13 - 24. Technical data for the environmental conditions.

Specified ambient service temperature	–35…+70 ºC
Transportation and storage temperature	–40…+70 ºC
Relative humidity	Up to 97 %
Altitude	Up to 2,000 m above sea level

13.14 Casing

Table. 13.14 - 25. Technical data for the device casing.

Protection: - front - back	 IP 52 IP 20
Device dimensions (W × H × D)	102 × 177 × 161 mm
Weight	1.2 kg

14 Ordering information

AQ-103LV arc flash protection device

AQ - 1 0 3 LV - X X X A X

Auxiliary power supply
- A 92...265 V AC/DC
- B 18...72 V DC

T3 trip relay setting
- A Normally open (NO)
- B Normally closed (NC), or Electronic lock-out

S5 sensor channel setting
- A None
- B Fiber optic sensor channel/AQD control

BI activation voltage threshold
- A 24 V DC

Communication
- A None
- B RS-485 Modbus

AQ-0x point sensors

AQ - 0 X X

Sensor function
- 1 Light point sensor
- 2 Light and pressure point sensor

Light activation level
- A 8,000 lx
- B 25,000 lx
- C 50,000 lx

AQ-0x fiber optic loop sensors

AQ - 0 X - X - X - X

Sensor function

6 Plastic fiber optic loop sensor
7 Glass fiber optic loop sensor
8 Glass fiber optic loop sensor (high temperature)

Cable length

(see the available options in the "Arc sensors" chapter of this manual)

End 1 covering length (AQ-07 only!)

0 None
1 1 meter
2 2 meters
(for other lengths please consult Arcteq sales at sales@arcteq.fi)

End 2 covering length (AQ-07 only!)

0 None
1 1 meter
2 2 meters
(for other lengths please consult Arcteq sales at sales@arcteq.fi)

Accessories

Order code	Description	Note	Manufacturer
AQX006	Wall mounting bracket	For AQ-103 and AQ-110x variants (MV and LV).	Arcteq Ltd.
AQX016	Wall mounting bracket	For AQ-101, AQ-101S and AQ-102 devices (MV and LV).	Arcteq Ltd.

15 Contact and reference information

Manufacturer

Arcteq Relays Ltd.

Visiting and postal address

Kvartsikatu 2 A 1

65300 Vaasa, Finland

Contacts

Phone:	+358 10 3221 370
Website:	arcteq.fi
Technical support:	support.arcteq.fi
	+358 10 3221 388 (EET 9:00 – 17.00)
E-mail (sales):	sales@arcteq.fi