ARCTEQ®
PART OF ENSTO GROUP

AQ-110xLV

Arc sensor device with overcurrent

Instruction manual

Table of contents

1 Document information 5
2 Abbreviations 6
3 General 7
4 Device features 8
5 Connections 9
5.1 Simplified block diagram 10
5.2 Inputs 12
5.2.1 Current measurement inputs 12
5.2.2 Arc sensor channels 13
5.2.3 Binary inputs 15
5.3 Outputs 15
5.3.1 Binary outputs 15
5.3.2 High-speed output(s) 16
5.3.3 Trip relays 16
5.3.4 System failure relay 17
5.4 Auxiliary voltage 17
6 Arc sensors 18
6.1 Arc light point sensor AQ-01 18
6.2 Arc light and pressure point sensor AQ-02 19
6.3 Arc light fiber optic loop sensor AQ-06 19
6.4 Arc light fiber optic loop sensor AQ-07 19
6.5 Arc light fiber optic loop sensor AQ-08 20
6.6 Sensor dependencies 20
6.7 Connecting sensors 20
6.7.1 Point sensors 20
6.7.2 Fiber loop sensors 21
7 Operation and configuration 23
7.1 Current threshold settings 23
7.2 DIP switch settings 23
7.2.1 Scheme selection 25
7.2.2 Available logic schemes 26
7.3 Push button (SET) 34
7.3.1 System setup (auto-configuration) 35
7.3.2 Reset 35
7.3.3 Input connection check 35
7.4 Circuit breaker failure protection 36
7.5 LED indicator functions 36
7.6 LED operations guide 36
7.7 Non-volatile memory 37
8 System self-supervision 39
9 Wiring example 41
10 Dimensions and installation 42
11 Testing 44
11.1 Testing the light-only mode 44
11.2 Testing the light and current mode 44
11.3 Testing the CBFP function 45
11.4 Testing the operation time 45
11.5 Test plan example 45
12 Troubleshooting 47
13 Technical data 48
13.1 Operating times 48
13.2 Auxiliary voltage 48
13.3 Binary inputs 48
13.4 Trip relays 48
13.5 High-speed output(s) 49

13.6 Binary output(s) 49
13.7 System failure relay 49
13.8 Point sensors 49
13.9 Fiber optic loop sensors 50
13.10 Disturbance tests 51
13.11 Voltage tests 51
13.12 Mechanical tests 51
13.13 Environmental conditions 52
13.14 Casing 52
14 Ordering information 53
15 Contact and reference information 55

Disclaimer

Please read these instructions carefully before using the equipment or taking any other actions with respect to the equipment. Only trained and qualified persons are allowed to perform installation, operation, service or maintenance of the equipment. Such qualified persons have the responsibility to take all appropriate measures, including e.g. use of authentication, encryption, anti-virus programs, safe switching programs etc. necessary to ensure a safe and secure environment and usability of the equipment. The warranty granted to the equipment remains in force only provided that the instructions contained in this document have been strictly complied with.

Nothing contained in this document shall increase the liability or extend the warranty obligations of the manufacturer Arcteq Relays Ltd. The manufacturer expressly disclaims any and all liability for any damages and/or losses caused due to a failure to comply with the instructions contained herein or caused by persons who do not fulfil the aforementioned requirements. Furthermore, the manufacturer shall not be liable for possible errors in this document.

Please note that you must always comply with applicable local legislation and regulations. The manufacturer gives no warranties that the content of this document is in all respects in line with local laws and regulations and assumes no liability for such possible deviations.

You are advised to notify the manufacturer in case you become aware of any errors in this document or of defects in the equipment.

The manufacturer reserves the right to update or amend this document at any time.

Copyright

1 Document information

Table. 1 - 1. History of Revision 1.

Revision	1.00
Date	September 2020
Changes	- The first revision of the manual.
Revision	1.01
Date	January 2023
Changes	- Updated the Arcteq logo on the cover. - Replaced "one fifths" with "; 1 A or 5 A secondary nominal can be selected" in the "Unit features" chapter. - Updated the distance between the flash and the unit in the "Testing the unit operation time" chapter. - Unified terminology used througout the manual (e.g. unit and device means the same thing. Now all AQ 100 series relays are called "devices"). - Improved many existing drawings. - Rearranged topics into a more logical order. - Added connection drawings to input and output descriptions under "Connections" chapter. - Added hyperlinks to chapters. (e.g. "See Device features chapter for more information") - Listed more features in Device features chapter. - T3 is now considered to be normally open by default and normally closed as an order option. - Added information about binary output pulse messages. - Many tables have been simplified and made easier to read. - Scheme matrixes and simplified logic diagrams have been made more detailed in "Available schemes" chapter.

2 Abbreviations

AQD – arc quenching device

BI – binary input

BO – binary output

CB – circuit breaker

CBFP – circuit breaker failure protection

CT – current transformer

EPROM – erasable, programmable read-only memory

HSO – high-speed output

LED – light emitting diode

LV – low-voltage

MV – medium-voltage

NC – normally closed

NO – normally open

PCB – printed circuit board

RF – radio frequency

Rx – receiver

SAS – standard arc scheme

SF – system failure

Tx – transceiver

µP - microprocessor

3 General

The AQ-110PLV is a sophisticated microprocessor-based arc flash protection device with point sensor channels and an optional fiber loop sensor channel. The AQ-110FLV is a sophisticated microprocessor-based arc flash protection device with fiber loop sensor channels. The devices are designed to minimize the damage caused by an arc fault. This is done by tripping the circuit breaker which supplies current to the fault when sensors detect arc light.

AQ-110PLV and AQ-110FLV devices have three phase current measurement channels. Devices can be set to require overcurrent to trip the circuit breaker when arc flash is detected.

The device includes a complete system self-supervision functionality which provides the highest level of dependability as it continuously monitors all internal system functions as well as all external connections.

Figure. 3 - 1. Arc protection devices AQ-110PLV (left) and AQ-110FLV (right).

The AQ-110PLV and AQ-110FLV are designed according to the latest protection relay standards and are therefore suitable for installations in rough environments. These include utilities and power plants (both traditional and renewable), various heavy industry applications (off-shore, marine, oil, gas, mining, steel, etc.) as well as commercial and institutional electrical systems. While these devices are suitable for MV use, it is designed for LV switchgears and for motor control center applications in both new and retrofitted installations.

4 Device features

AQ-110PLV and AQ-110FLV are arc flash protection devices which can be applied to a variety of applications. Both can be used on their own as a stand-alone device, or they can be a part of a more complex arc protection system by using binary inputs and outputs to connect multiple AQ 100 series devices together.

The AQ-110PLV supports four (4) arc sensing point sensor channels as well as one (1) optional fiber sensor channel for arc detection or arc quencher control. The AQ-110FLV supports three (3) arc sensing fiber sensor channels as well as one (1) optional fiber channel for arc quencher control. All other features are the same in both variants.

The following list presents the main features of the AQ-110PLV device:

- 92…265 V AC/DC auxiliary power supply or 18…72 V DC auxiliary power supply (optional)
- three (3) phase current inputs; 1 A or 5 A secondary nominal can be selected
- one (1) trimmer for configuring overcurrent function trip level
- four (4) arc flash point sensor channels, max. three (3) point sensors per channel
- one (1) fiber loop sensor channel for arc flash detection or AQ-1000 arc quenching device control (optional)
- two (2) binary inputs with nominal operation voltage of 24 V DC
- two (2) high-speed semiconductor trip outputs (HSO [HSO1] and HST [HSO2])
- four (4) trip relay outputs
- one (1) binary output (with internal 24 V DC power supply)
- one (1) system failure output (change-over)
- nineteen (19) indication LEDs
- sixteen (16) DIP switches for logic configuration
- one (1) push button.

The following list presents the main features of the AQ-110FLV device:

- 92…265 V AC/DC auxiliary power supply or 18…72 V DC auxiliary power supply (optional)
- three (3) phase current inputs; 1 A or 5 A secondary nominal can be selected
- one (1) trimmer for configuring overcurrent function trip level
- three (3) fiber loop sensor channels for arc flash detection
- one (1) fiber connector for AQ-1000 arc quenching device control (optional)
- two (2) binary inputs with nominal operation voltage of 24 V DC
- two (2) high-speed semiconductor trip outputs (HSO [HSO1] and HST [HSO2])
- four (4) trip relay outputs
- one (1) binary output (with internal 24 V DC power supply)
- one (1) system failure output (change-over)
- eighteen (18) indication LEDs
- sixteen (16) DIP switches for logic configuration
- one (1) push button.

5 Connections

The figures below depict the connections of AQ-110PLV and AQ-110FLV. Please note that the SF relay is in the de-energized position; also note that the device has been halved for the image to allow for space for all connector explanations.

Figure. 5 - 2. Rear terminals of AQ-110PLV.

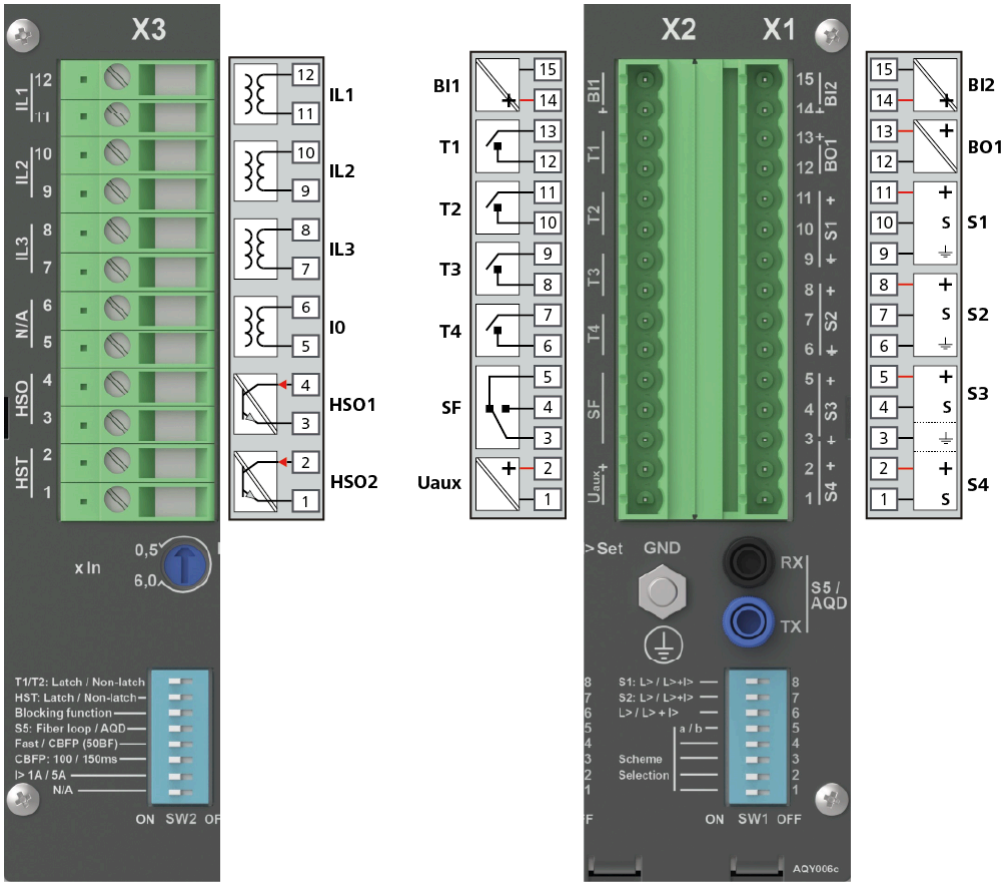

Figure. 5 - 3. Rear terminals of AQ-110FLV.

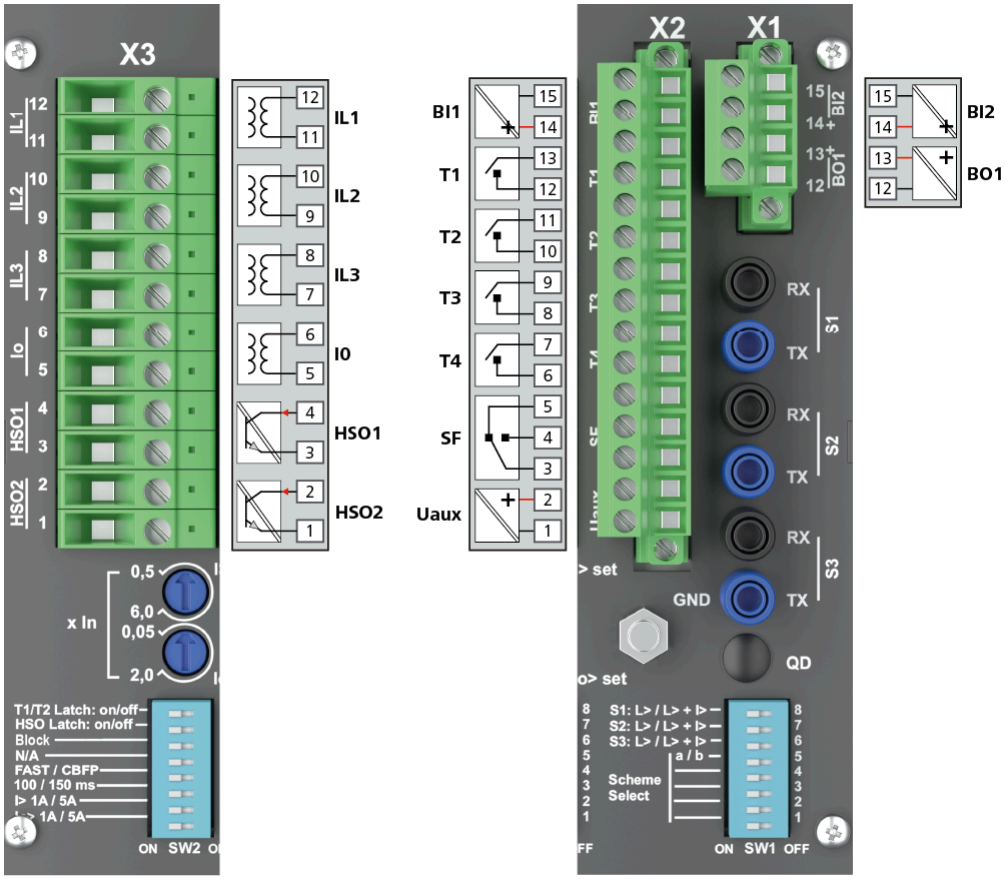

5.1 Simplified block diagram

The figures below presents the main components that can be found in the AQ-110xLV devices (AQ-110PLV and AQ-110FLV).

Figure. 5.1 - 4. Simplified block diagram of AQ-110PLV.

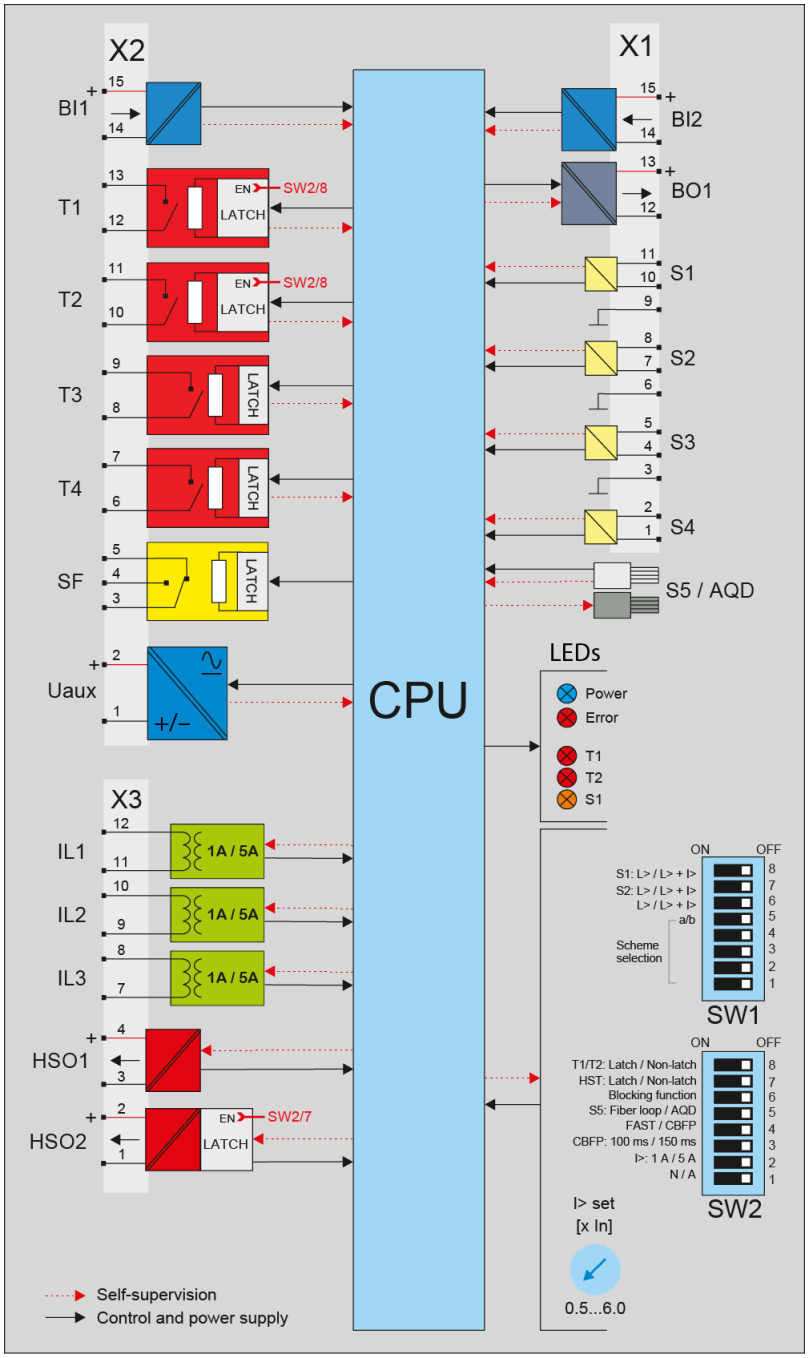

Figure. 5.1 - 5. Simplified block diagram of AQ-110FLV.

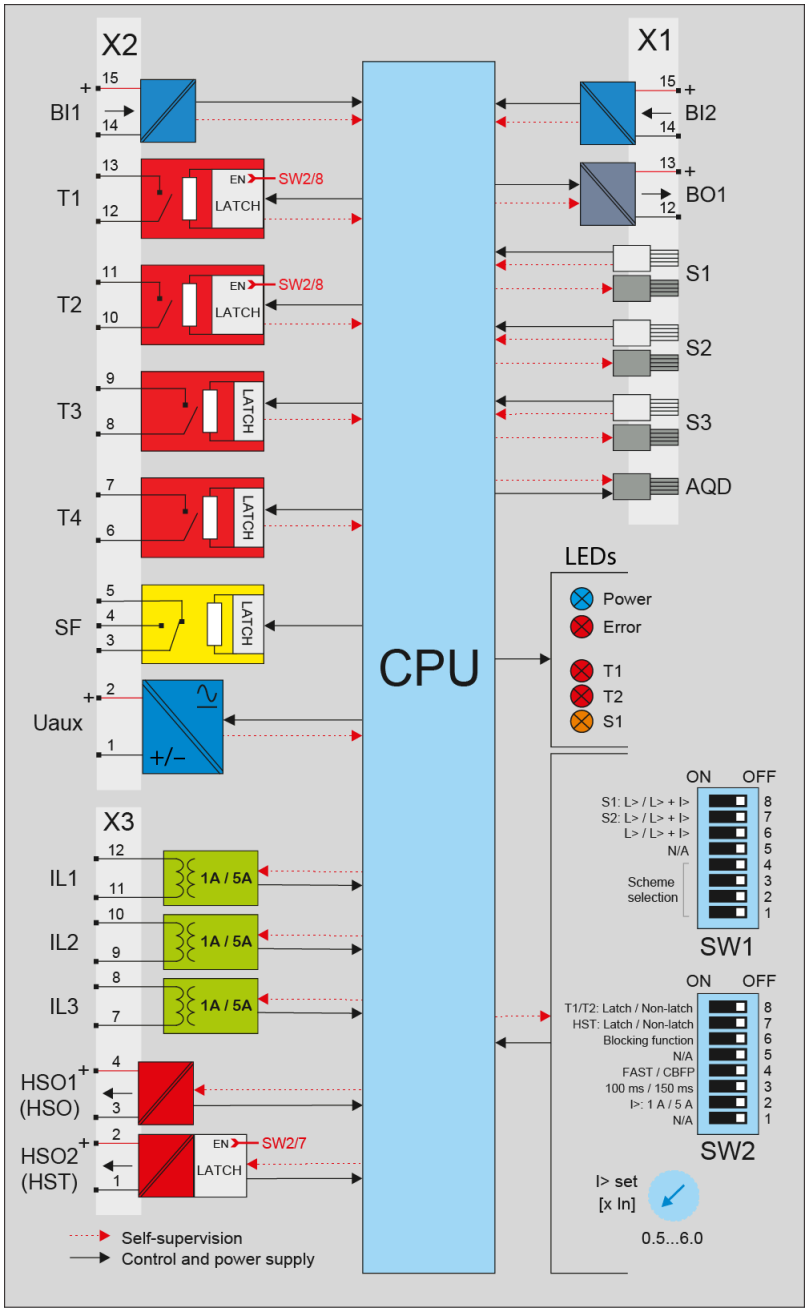

5.2 Inputs

5.2.1 Current measurement inputs

Figure. 5.2.1 - 6. Current measurement connections

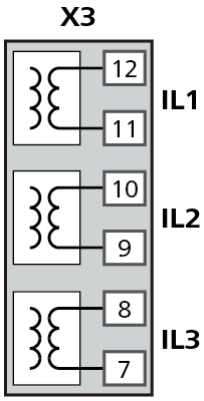

This device contains three (3) CT inputs for measuring the three phase currents. The phase current inputs can be configured to a nominal current of 1 A or 5 A with the DIP switches (for more information, please refer to the DIP switch settings chapter).

The Current threshold settings chapter describes the setting of current threshold levels in more detail. The same chapter also describes the open circuit detection feature included in the AQ-110xLV devices.

This device includes a current transformer supervision function. See System self-supervision chapter for more information.

5.2.2 Arc sensor channels

AQ-110PLV

Figure. 5.2.2 - 7. Arc point sensor connections

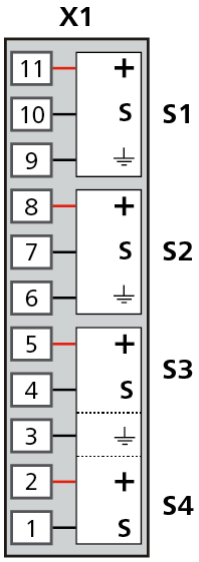

AQ-110PLV has four (4) arc point sensor channels: S1, S2, S3 and S4. You can connect a maximum of three (3) arc point sensors to each channel. When the arc protection system has been set up, point sensor connections are constantly monitored. In case of sensor fault or disconnection, the device will go into Error mode. See System self-supervision chapter for more information.

Figure. 5.2.2 - 8. Optional fiber loop channel connection

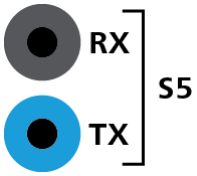

S5 is the optional fiber loop sensor channel with a transmitter (Tx) terminal and a receiver (Rx) terminal. The function of S5 is controlled with the DIP switches (please refer to the DIP switch settings chapter for more information). When S5 is configured as a fiber loop sensor channel, one of its ends is connected to "Tx" and the other to "Rx". This sensor loop is then continuously monitored by a test light pulse that travels through the loop. If a discontinuity is detected, the device goes into Error mode. See System self-supervision chapter for more information.

Alternatively, S5 can be configured to control the arc quenching device (AQD). Device sends a test pulse continuously to the arc quenching device to supervise the fiber connection. If the arc quenching device doesn't receive the test pulses the device will go into Error mode.

For more information on sensors, please refer to the Arc sensors chapter as well as to the AQ-0x instruction booklet which can be found on Arcteq's website (https://www.arcteq.fi/downloads/). For more information on AQ-1000 arc quenching device (AQD) please refer to the AQ-1000 Instruction manual.

AQ-110FLV

Figure. 5.2.2 - 9. Arc fiber loop sensor and arc quenching device connections

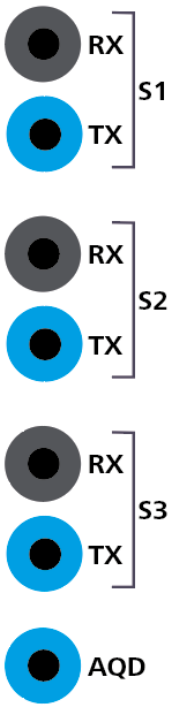

AQ-110FLV has three (3) arc fiber loop sensor channels: S1, S2 and S3. Each channel has a transmitter (Tx) terminal and a receiver (Rx) terminal. These sensor loops are continuously monitored by a test light pulse that travels through the loop. If a discontinuity is detected, the device goes into Error mode. See System self-supervision chapter for more information.

AQ-110F can be ordered with an additional transmitter (Tx) terminal for arc quenching device (AQD) control. Device sends a test light pulse continuously to the arc quenching device to supervise the fiber connection. If the arc quenching device doesn't receive the test pulses the device will go into Error mode.

For more information on sensors, please refer to the Arc sensors chapter as well as to the AQ-0x instruction booklet which can be found on Arcteq's website (https://www.arcteq.fi/downloads/). For more information on AQ-1000 arc quenching device (AQD) please refer to the AQ-1000 Instruction manual.

5.2.3 Binary inputs

Figure. 5.2.3 - 10. Binary input connections

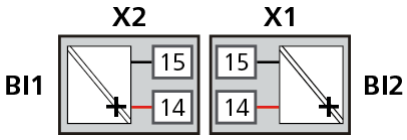

This device contains two (2) binary inputs. Typically, the binary inputs are used for receiving arc light signals, master trip commands or overcurrent signals. Function of binary inputs are configured using DIP switches. For more information, please refer to the DIP switch settings chapter.

Please note that when this device receives an overcurrent signal from a non-AQ 100 series device, the actual operating time depends on the operating time of the that device. Therefore, the total operating time cannot be specified in the technical data.

The binary inputs are activated when a connected DC signal reaches the specified nominal voltage level of the corresponding input. The nominal voltage level for this device is 24 VDC. Please note that the actual activation threshold of the binary input is at a lower voltage than the specified nominal voltage value (see Techical Data chapter).

AQ 100 series devices monitor health of wiring between binary inputs and binary outputs. If binary input loses connection to any of the configured binary outputs, the device will go into Error mode. See System self-supervision chapter for more information.

5.3 Outputs

5.3.1 Binary outputs

Figure. 5.3.1 - 11. Binary output connection

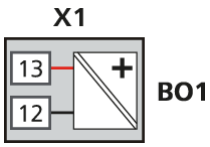

The device has one (1) binary output: BO1. AQ 100 series binary outputs have an internal 24 VDC power supply. This binary output is used for sending overcurrent, light detection, master trip and other signals to other AQ 100 series devices in the same system. The binary output function can be configured with the DIP switches. For more information on the configuration, please refer to the DIP switch settings chapter.

AQ 100 series device's binary outputs send out a short pulse every second. Binary inputs of the receiving AQ 100 series devices use these pulses to count the number of connected binary outputs. See System self-supervision chapter for more information.

NOTE!

Please note that the binary ouputs are polarity-sensitive.

5.3.2 High-speed output(s)

The device contains two (2) high-speed semiconductor outputs, namely HSO and HST. These outputs can used as heavy-duty signaling outputs. Due to their high current-carrying capacity, HSO and HST can send overcurrent or light information to a maximum of twenty (20) pieces of AQ 100 series devices without a need for signal amplifiers. The operation of these high-speed outputs depends on the DIP switch settings (for more information, please refer to the DIP switch settings chapter).

The output's direction of rotation is as follows: the signal goes in the even pin and out from the odd pin (see the image below, as detailed in the device's side sticker).

Figure. 5.3.2 - 12. The high-speed output's direction of rotation.

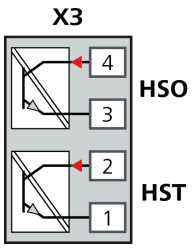

NOTE!

The high-speed outputs are polarity-sensitive.

5.3.3 Trip relays

Figure. 5.3.3 - 13. Trip relay connections

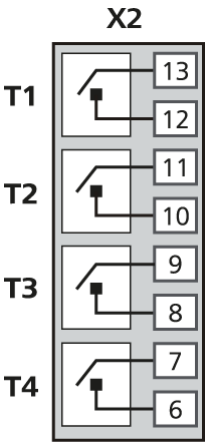

This device has four (4) normally open trip relay outputs. Trip relays T1 and T2 are used for tripping circuit breakers. T4 is generally used for tripping one additional disconnecting device, or as a trip alarm (local or remote) monitoring and alarming system.

T3 can alternatively be ordered as a normally closed trip relay (electronic lock-out relay). Once opened by fault detection it holds its open position until it receives a manual reset command or until auxiliary power supply is lost. When re-applying the auxiliary power supply, the electronic lock-out relay returns to the same contact condition it had prior to the power loss. This normally closed relay output can also be used for tripping contactor-controlled devices.

T3 and T4 are always latching relays. Trip relays T1 and T2 can be set as latching relays by setting DIP switch SW2:8 ("T1/T2: Latching / Non-latching") to "Latching" position. Latched relays can be reset by pressing the "SET" button.

5.3.4 System failure relay

Figure. 5.3.4 - 14. System failure relay connection (de-energized position)

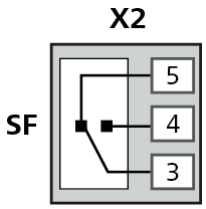

The system failure (SF) relay is of the change-over type (NO/NC) and it is energized when the device is in a healthy condition and powered on. Whenever the device detects a system error or the auxiliary power supply is disconnected, the SF relay changes its state. The state stays this way until the device returns to a healthy condition. See the System self-supervision chapter for more information.

5.4 Auxiliary voltage

Figure. 5.4 - 15. Auxiliary power supply connection

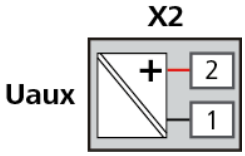

The auxiliary power supply voltage is 92….265 V AC/DC. Alternatively, the optional auxiliary power supply can be of 18…72 V DC. This choice must be specified when ordering.

6 Arc sensors

The AQ 100 series provides arc light point sensors and arc light fiber optic loop sensors. These sensors can be used with different devices and different switchgear types according to specific application requirements.

Arc light point sensors are typically installed in metal-clad compartments, and they provide a quick and accurate location of the faulted area. Arc light fiber loop sensors typically cover a wider protected area with one fiber, when there is no need to pinpoint the exact location for a fault.

6.1 Arc light point sensor AQ-01

AQ-01 is an arc light point sensor with a light-sensitive photodiode element activated by arc light. The AQ-01 sensors should be mounted in the switchgear cubicles in such a way that the light-sensitive part covers the protected area as completely as possible. While multiple sensors can be installed, in most cases one sensor per closed metal-clad compartment is sufficient. In open spaces (such as a busbar section) the sensors should be mounted no more than two meters apart.

The default light intensity threshold for an AQ-01 sensor is 8,000 lux. Depending on the demand of the application, light point sensors can be ordered with 25,000 lux or 50,000 lux thresholds. Its detection radius is 180 degrees.

Figure. 6.1 - 16. The AQ-01 light sensor.

An AQ-01 is installed either inside or outside the compartment wall. When mounting inside the wall, the sensor is placed on the wall with the colored side against the wall and then fixed to the wall with two screws. When mounting outside the wall the sensor is placed on the wall with the grey side against the wall and the eye is pushed into the drilled compartment hole and then fixed to the wall with two screws from the back of the sensor. No external mounting plates are needed regardless of the mounting type; however, mounting brackets can be used if so desired.

Up to three (3) sensors can be connected in series (with the exception of AQ-103 which can take only one point sensor per channel). Installing a connection cable is simple as each end of the sensor has a detachable cover over the cable connectors. Please remember to reattach the cover once the wires have been installed.

NOTE!

The AQ-01 point sensor does not come with a connection cable!

6.2 Arc light and pressure point sensor AQ-02

AQ-02 is an arc light and pressure point sensor that comes with arc light detection and ambient pressure detection. AQ-02 point sensor activates when both light and pressure are detected. The AQ-02 sensors should be mounted in the switchgear cubicles in such a way that the light-sensitive part covers the protected area as completely as possible. While multiple sensors can be installed, in most cases one sensor per closed metal-clad compartment is sufficient. The AQ-02 sensors cannot be installed in open spaces.

The default light intensity threshold for an AQ-02 sensor is 8,000 lux. Depending on the demand of the application, AQ-02 can also be ordered with 25,000 lux or 50,000 lux thresholds. Its detection radius is 180 degrees. The pressure threshold is fixed at 0.2 bar above ambient pressure.

Figure. 6.2 - 17. AQ-02 arc light and pressure point sensor.

An AQ-02 can only be installed inside the compartment wall as not to block pressure detection located next to "the eye". The sensor is placed on the wall (with the colored side against the wall), and then fixed to the wall with two screws. No external mounting plates are needed regardless of the mounting type; however, mounting brackets can be used if so desired.

Up to three (3) sensors can be connected in series (with the exception of AQ-103 which can take only one point sensor per channel). Installing a connection cable is simple as each end of the sensor has a detachable cover over the cable connectors. Please remember to reattach the cover once the wires have been installed.

NOTE!

The AQ-02 point sensor does not come with a connection cable!

6.3 Arc light fiber optic loop sensor AQ-06

AQ-06 is an arc light fiber optic loop sensor, which is a plastic fiber optic cable. Fiber sensors are distributed through the protected switchgear cells. The fixed light intensity threshold of an AQ-06 sensor is 8,000 lux. The sensor's detection radius is 360 degrees.

AQ-06 sensors can be ordered in pre-manufactured lengths of 3…40 meters (3 m, 5 m, 10 m, 15 m, 20 m, 25 m, 30 m, 35 m, 40 m).

6.4 Arc light fiber optic loop sensor AQ-07

AQ-07 is an arc light fiber optic loop sensor, which is a robust fiber optic cable with a practically unlimited bending radius. The sensor contains hundreds of glass fiber drains covered by a plastic tube, thus making it extremely strong and durable. Fiber sensors are distributed through the protected switchgear cells.

AQ-07 sensors can be ordered in pre-manufactured lengths of 3…50 meters (3 m, 5 m, 10 m, 15 m, 20 m, 25 m, 30 m, 35 m, 40 m, 45 m, 50 m).

The fixed light intensity threshold of an AQ-07 sensor is 8,000 lux. The sensor's detection radius is 360 degrees.

If necessary, the ends of an AQ-07 cable can be ordered with heat shrinking tubing to avoid light detection outside the protected zone. The covered area can be one (1) or two (2) meters by default; if other lengths are required, please consult the Arcteq sales team. You can find the Contact and reference information page at the end of this manual.

6.5 Arc light fiber optic loop sensor AQ-08

AQ-08 is an arc light fiber optic loop sensor. It is designed to withstand temperatures up to 125 ºC, which makes it suitable for e.g. wind turbine windings. AQ-08 is a robust fiber optic cable with a practically unlimited bending radius. The sensor contains hundreds of glass fiber drains that are covered by a plastic tube, thus making it extremely strong and durable. Fiber sensors are distributed through the protected switchgear cells.

AQ-08 sensors can be ordered in pre-manufactured lengths of 3…15 meters (3 m, 5 m, 10 m, 15 m).

The fixed light intensity threshold of an AQ-08 sensor is 8,000 lux. The sensor's detection radius is 360 degrees.

6.6 Sensor dependencies

Compatibility of arc sensor types depend on the hardware available in the AQ 100 series device. The table below describes those dependencies.

Table. 6.6 - 2. Sensor dependencies.

	Point sensors (AQ-01 & AQ-02)	Fiber loops (AQ-06, AQ-07 & AQ-08)
AQ-101LV	Yes	Order option
AQ-101DLV	Yes	Order option
AQ-102LV	No	Yes
AQ-103LV	Yes	Order option
AQ-110PLV	Yes	Order option
AQ-110FLV	No	Yes

6.7 Connecting sensors

6.7.1 Point sensors

Figure. 6.7.1 - 18. Wiring diagram of point sensors.

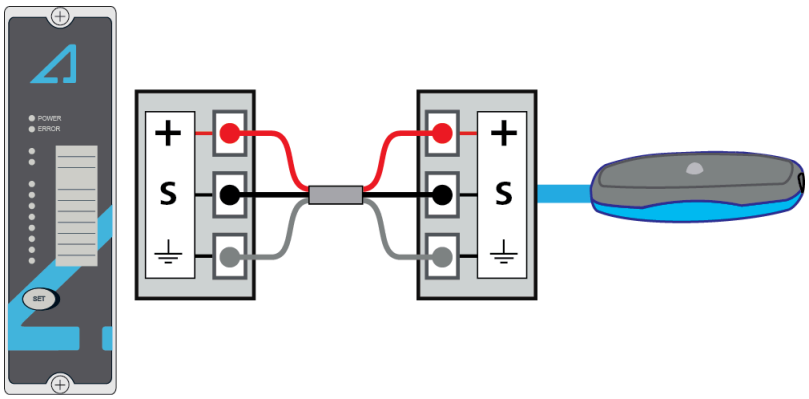

1. Open the sensor covers and detach the connectors.
2. Attach the cable to the connector and to the arc protection device.
3. Reattach the connectors to the sensor.
4. Run the auto-configuration procedure. See System setup for more details.

6.7.2 Fiber loop sensors

1. Drill holes on the wall for the sensor cable to enter the protected compartment.
2. Install protective covers in the holes to ensure the sensor cable remains unharmed by rough edges.

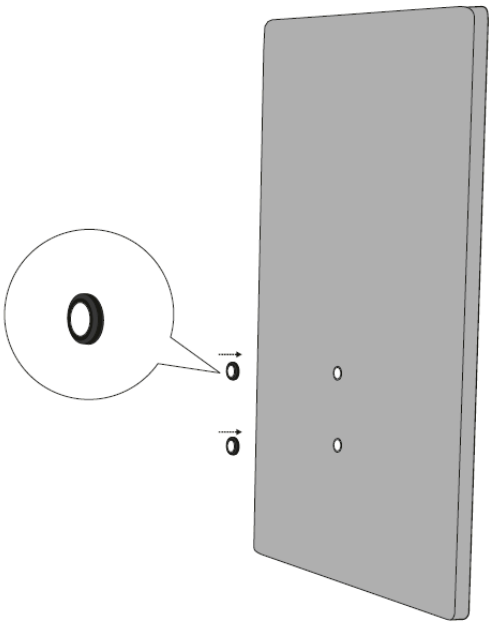

3. Run the sensor cable through the holes and along the protected area. Fasten it to the compartment walls with cable clips or some other appropriate anchoring method.

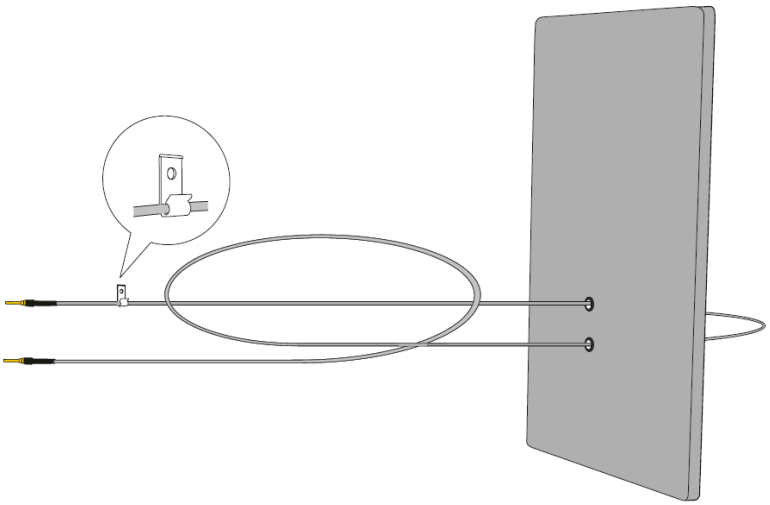

4. Turn the black and blue receiver (“Rx”) and transceiver (“Tx”) screws counter-clockwise and plug in the sensor cable terminals. Then turn the screws clockwise to secure the terminals in their place.

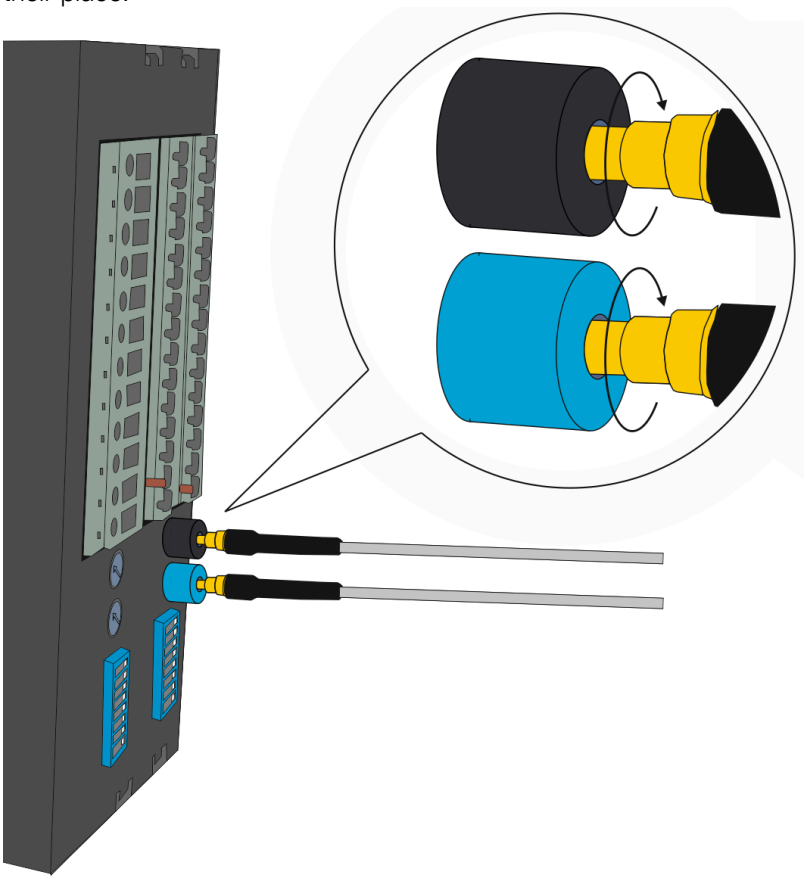

7 Operation and configuration

7.1 Current threshold settings

The AQ-110xLV devices have three (3) phase current measurement inputs. The phase current measurements can be used as additional trip criteria in an arc protection system to avoid trips caused by natural light sources. When an arc sensor channel has been set to "Light and overcurrent" mode, overcurrent and light must be detected simultaneously for the device to trip.

Depending on the selected logic scheme the device can also send overcurrent indication signals with binary outputs or high-speed outputs to external devices.

Figure. 7.1 - 19. DIP switch for defining nominal current.

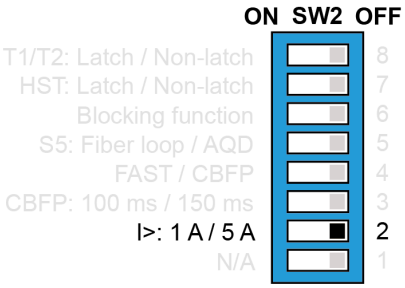

DIP switch SW2:2 can be used for selecting either 1 A or 5 A nominal current. The set points are set by using the trimmers (see the image below). The setting range for the phase overcurrent stage is 0.5…6 × I_n. The threshold for phase overcurrent is typically set to 50 % above the highest load current. You can get an accurate setting by injecting the desired set current into the phase current inputs of the device and by simultaneously adjusting the trimmer until the phase current indicator LEDs are lit.

Figure. 7.1 - 20. Overcurrent setting trimmer.

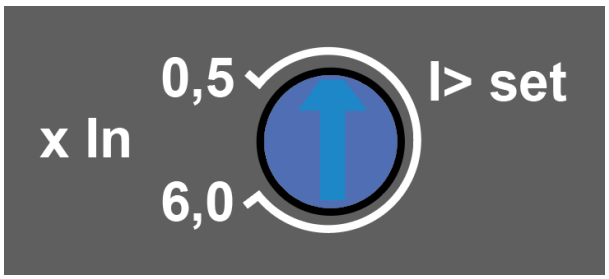

7.2 DIP switch settings

The DIP switches are used to easily configure various tripping logics and other functionalities for the device. Both AQ-110 variants contain two switch groups, SW1 and SW2. They are located at the back of the device. The figure below presents the numbering of the two switch groups, and the tables below that give a detailed description of the settings for both switch groups.

Protection logic can be defined by selecting a logic scheme with DIP switches SW1:1 to SW1:5. The scheme selection is based on binary arithmetic. Logic schemes are described in the next chapter.

Tripping can be set with DIP switches to require either just arc light or both arc light and overcurrent simultaneously. Adding overcurrent criteria ensures the device trips when an arc fault occurs but not when a strong natural light source hits the light sensor (e.g. sunlight). Device can detect overcurrent by measuring phase currents and residual current or by receiving overcurrent signal from an external device (mainly another AQ-110PLV or AQ-110FLV device) which is connected to a binary input.

CBFP (circuit breaker failure protection) function can be enabled with DIP switch SW2:4. CBFP time delay (100 ms or 150 ms) can be set with DIP switch SW2:3. CBFP logic depends on the selected logic scheme. See Circuit breaker failure protection chapter for more information.

Figure. 7.2 - 21. DIP switch diagram for AQ-110PLV (above) and AQ-110FLV (below).

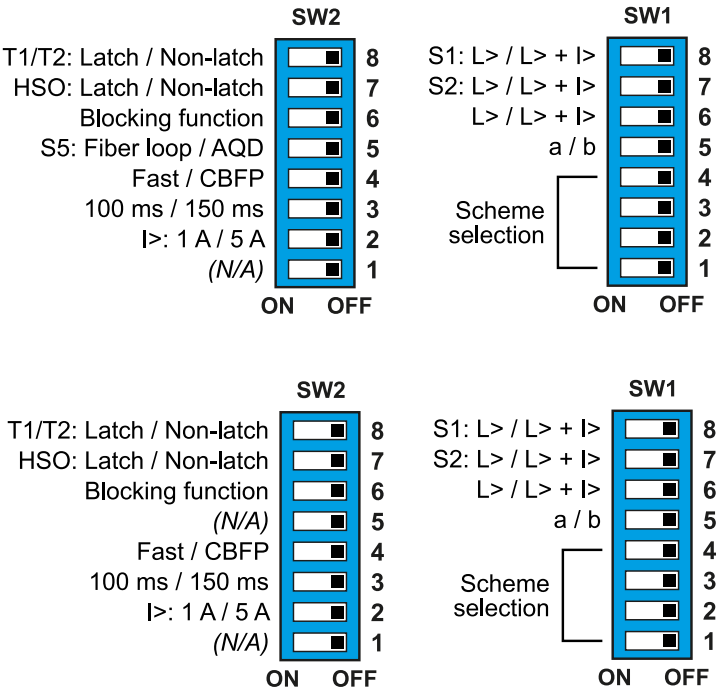

Table. 7.2 - 3. DIP switch settings for SW1 group.

Switch		Function selection	ON (left position)	OFF (right position)
8	S1: L> or L> + I>	The tripping criterion for the S1 point sensor channel. (AQ-110PLV) The tripping criterion for the S1 fiber loop sensor channel. (AQ-110FLV)	Tripping on light only (L>).	Light detection only trips if overcurrent is also detected at the same time (L> + I>).
7	S2: L> or L> + I>	The tripping criterion for the S2 point sensor channel. (AQ-110PLV) The tripping criterion for the S2 fiber loop sensor channel. (AQ-110FLV)		
6	S3: L> or L> + I> L> or L> + I>	The tripping criterion for the S3 and S4 (point sensor) and S5 fiber loop channels. (AQ-110PLV) The tripping criterion for the S3 fiber loop channel. (AQ-110FLV)		
5	a or b	Selects the logic scheme.	Please refer to the Scheme selection chapter.	Please refer to the Scheme selection chapter.
4–1	Scheme selection		Switch 1: 1 Switch 2: 2 Switch 3: 4 Switch 4: 8 Switch 5: a	Switch 1: 0 Switch 2: 0 Switch 3: 0 Switch 4: 0 Switch 5: b

Table. 7.2 - 4. DIP switch settings for SW2 group.

Switch		Function selection	ON (left position)	OFF (right position)
8	T1/T2: latching or non-latching	Enables or disables T1 and T2 latching.	T1 and T2 operate as latching relays.	T1 and T2 latching is disabled.
7	HST: latching or non-latching	Enables or disables HST (HSO2) high-speed output latching.	HST (HSO2) operates as a latching output.	HST (HSO2) latching is disabled.
6	Blocking function	Selects the function of a binary input.	The blocking function is selected.	A specific signal is selected. The signal is scheme-dependent, and can be either an external current signal or an external light signal.
5	S5: Fiber loop or AQD Only in AQ-110P!	The selection between the fiber loop function and the arc quenching system (AQD) control.	The S5 fiber sensor channel operates as the fiber loop sensor function.	The S5 fiber sensor channel operates as the arc quenching system (AQD) control. The Tx terminal of S5 sends a test pulse signal to the quenching system.
4	fast or CBFP	Enable or disable CBFP time delay.	CBFP time delay is not used.	Depending on the selected scheme, some outputs (trip contacts and binary output) activate after a time delay if the fault is not cleared. Check the logic scheme diagram for more information.
3	100 ms or 150 ms	The setting for the CBFP time.	The CBFP time is set to 100 ms.	The CBFP time is set to 150 ms.
2	I>: 1 A or 5 A	The nominal current selection for the phase currents IL1, IL2 and IL3.	The nominal current is 1 A.	The nominal current is 5 A.
1	*N/A*	*(Reserved for future use.)*	—	—

7.2.1 Scheme selection

This chapter describes the schemes available for both AQ-110PLV and AQ-110FLV. The schemes are configured using the first DIP switch group (SW1) and its switches numbered 1…4 ("Scheme selection") and 5 ("a or b"). The scheme selection is based on binary arithmetic:

- Switch 1: 1
- Switch 2: 2
- Switch 3: 4
- Switch 4: 8
- Switch 5: a or b

Figure. 7.2.1 - 22. DIP switches used for selecting the logic scheme.

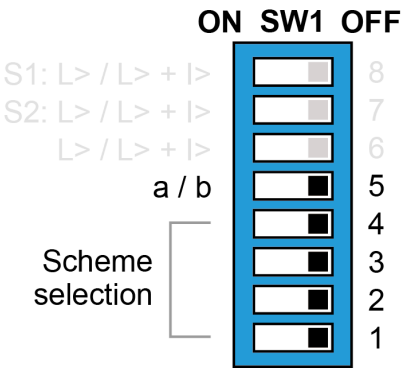

AQ 100 series arc protection devices can be used as a stand-alone device or as a part of a more complex arc portection system with multiple AQ 100 series devices. The most convenient way to set the device to a more complex arc protection system is to use Standard Arc Schemes (SAS). For detailed instructions on each of the available Standard Arc Schemes please refer to the AQ-SAS™ booklet (can be found at arcteq.fi/downloads/).

7.2.2 Available logic schemes

The schemes described below are the most commonly used ones for AQ-110PLV and AQ-110FLV devices. However, additional schemes are also available; please contact your nearest Arcteq representative for more information on those schemes.

SS:0a

Figure. 7.2.2 - 23. The trip logic matrix of SS:0a.

SS:0a		OUTPUTS							
		T1	T2	T3	T4	BO1	HSO1	HSO2	AQD
INPUTS	S1	x[1]	x[1]	CBFP[1]	x[1]	CBFP[2]		CBFP[1]	x[3]
	S2	x[1]	x[1]	x[1]	x[1]	x			x[4]
	S3	x[1]	CBFP[1]	x[1]	x[1]	x			x[4]
	S4 & S5	x[1]	CBFP[1]	x[1]	x[1]	x			x[4]
	Lext> AQ-110 (BI1)	x[1]	CBFP[1]	x[1]	x[1]				x[4]
	Lext> AQ-101 (BI2)	x[1]	CBFP[1]	x[1]	x[1]	x			x[4]
	I> (phase currents)						x		

1) Activates only if DIP-switch has been set to light only mode or if overcurrent signal (I>) is ON.
2) If SW2/4 is set to CBFP position, DIP-switch must be set to light only mode or overcurrent signal (I>) to be active for output activation to occur. If SW2/4 is set to FAST position, no current signal is required.
3) Activates only when SW2/4 is set to FAST position. Also when SW1/8 is set to light mode, current detection is not required for activation.
4) Activates only if overcurrent signal (I>) is ON.

CBFP signals are activated instantly if SW2/4 is set to FAST position, delayed if DIP-switch 2/4 is set to CBFP-position. SW2/3 can be used for choosing 100 ms or 150 ms delay time.

Figure. 7.2.2 - 24. Simplified logic diagram of SS:0a.

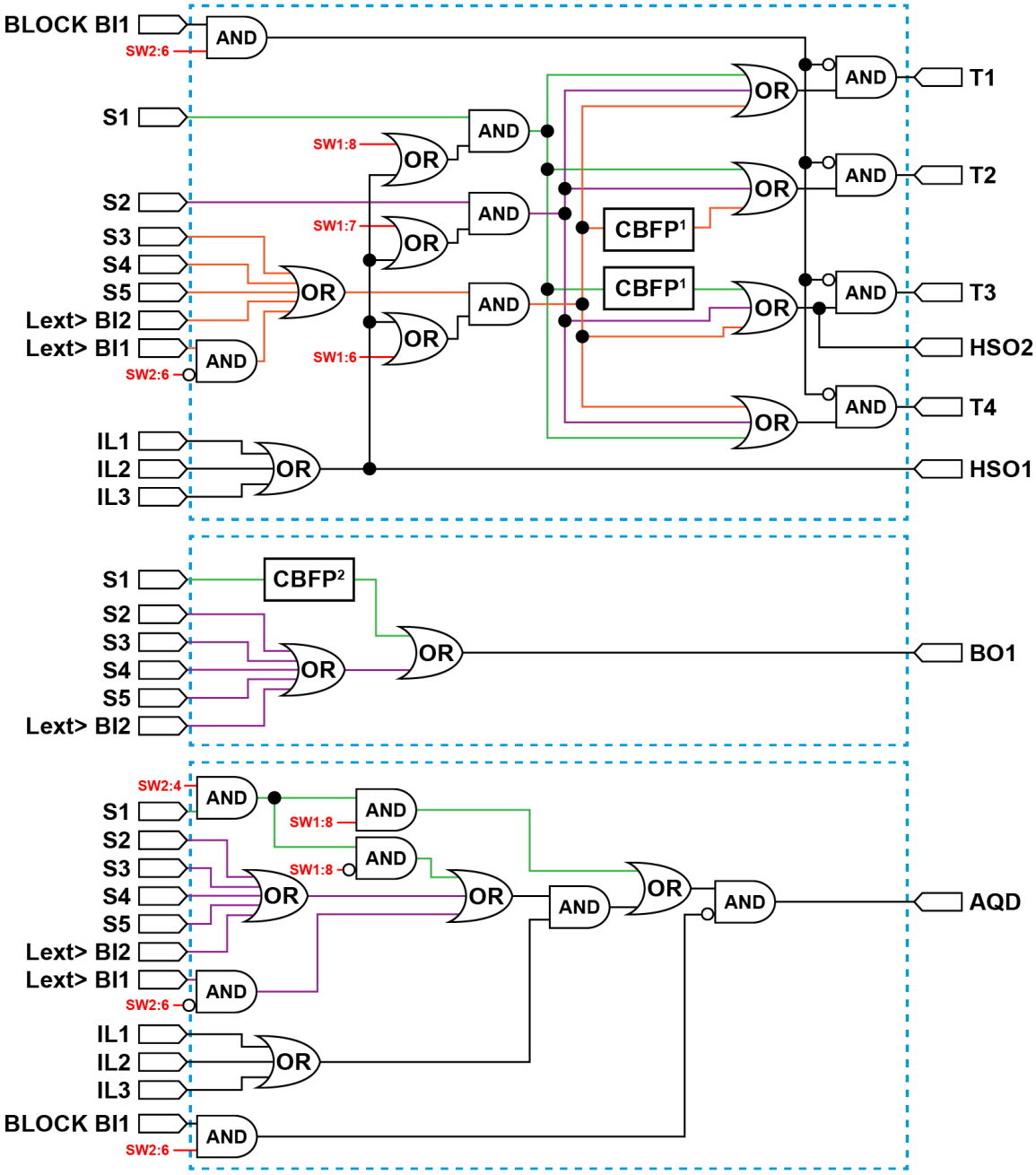

1) CBFP signals are activated instantly if SW2/4 is set to FAST position, delayed if DIP-switch 2/4 is set to CBFP-position. SW2/3 can be used for choosing 100 ms or 150 ms delay time.
2) If SW2/4 is set to CBFP position, DIP-switch must be set to light only mode or overcurrent signal (I>) to be active for output activation to occur. If SW2/4 is set to FAST position, no current signal is required.

SS:0b

Figure. 7.2.2 - 25. The trip logic matrix of SS:0b.

SS:0b		OUTPUTS							
		T1[1]	T2[1]	T3[1]	T4[1]	BO1	HSO1	HSO2	AQD[1]
INPUTS	S1	x[2]	x[2]	CBFP[2]	x[2]			CBFP[2]	
	S2	x[2]	x[2]	x[2]	x[2]			x[2]	x[3]
	S3	x[2]	CBFP[2]	x[2]	x[2]			x[2]	x[3]
	S4 & S5	x[2]	CBFP[2]	x[2]	x[2]			x[2]	x[3]
	Lext> AQ-101 (BI2)	x[2]	CBFP[2]	x[2]	x[2]			x[2]	x[3]
	Iext> AQ-110 (BI1)						x		
	I> overcurrent					x	x		

1) Activates only if DIP-switch has been set to light only mode or if any overcurrent signal (I>, Io> or Iext>) is ON.
2) Activates only if phase overcurrent signal (I>) or external overcurrent signal (Iext>) is ON.
3) Activates only if external overcurrent (Iext>) is ON.
4) Activates only if CBFP signals are not active.

CBFP signals are activated instantly if SW2/4 is set to FAST position, delayed if DIP-switch 2/4 is set to CBFP-position. SW2/3 can be used for choosing 100 ms or 150 ms delay time.

Figure. 7.2.2 - 26. Simplified logic diagram of SS:0b.

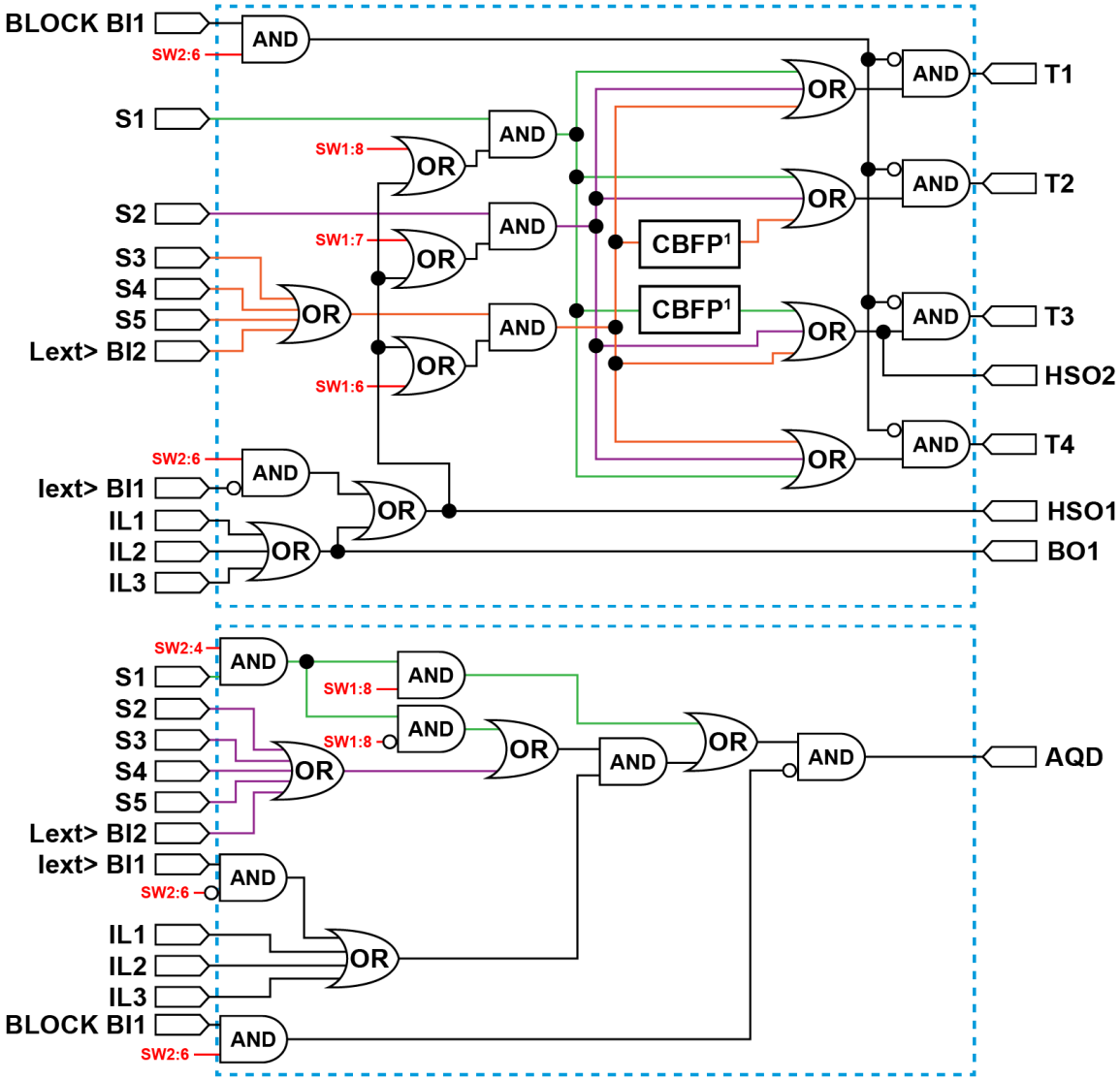

1) CBFP signals are activated instantly if SW2/4 is set to FAST position, delayed if DIP-switch 2/4 is set to CBFP-position. SW2/3 can be used for choosing 100 ms or 150 ms delay time.

SS:1a

Figure. 7.2.2 - 27. The trip logic matrix of SS:1a.

SS:1a		OUTPUTS							
		T1[1]	T2[1]	T3[1]	T4[1]	BO1	HSO1	HSO2	AQD[1]
INPUTS	S1	x[2]	x[2]	CBFP[2]	x[2]	x[3]		CBFP[2]	
	S2	x[2]	x[2]	x[2]	x[2]	x		x[2]	x[4]
	S3	x[2]	CBFP[2]	x[2]	x[2]	x		x[2]	x[4]
	S4 & S5	x[2]	CBFP[2]	x[2]	x[2]	x		x[2]	x[4]
	Lext> AQ-110 (BI1)	x[1]	CBFP[1]	x[1]	x[1]			x[1]	x[3]
	Lext> AQ-101 (BI2)	x[2]	CBFP[2]	x[2]	x[2]	x		x[2]	x[4]
	I> overcurrent					x	x		

1) If SW2/6 is ON, activation is blocked if BI1 is active.
2) Activates only if DIP-switch has been set to light only mode or if overcurrent signal (I>) is ON.
3) If SW2/4 is set to CBFP position, DIP-switch must be set to light only mode or any overcurrent signal (I>) to be active for output activation to occur. If SW2/4 is set to FAST position, no current signal is required.
4) Activates only if overcurrent signal (I>) is ON.

CBFP signals are activated instantly if SW2/4 is set to FAST position, delayed if DIP-switch 2/4 is set to CBFP-position. SW2/3 can be used for choosing 100 ms or 150 ms delay time.

Figure. 7.2.2 - 28. Simplified logic diagram of SS:1a.

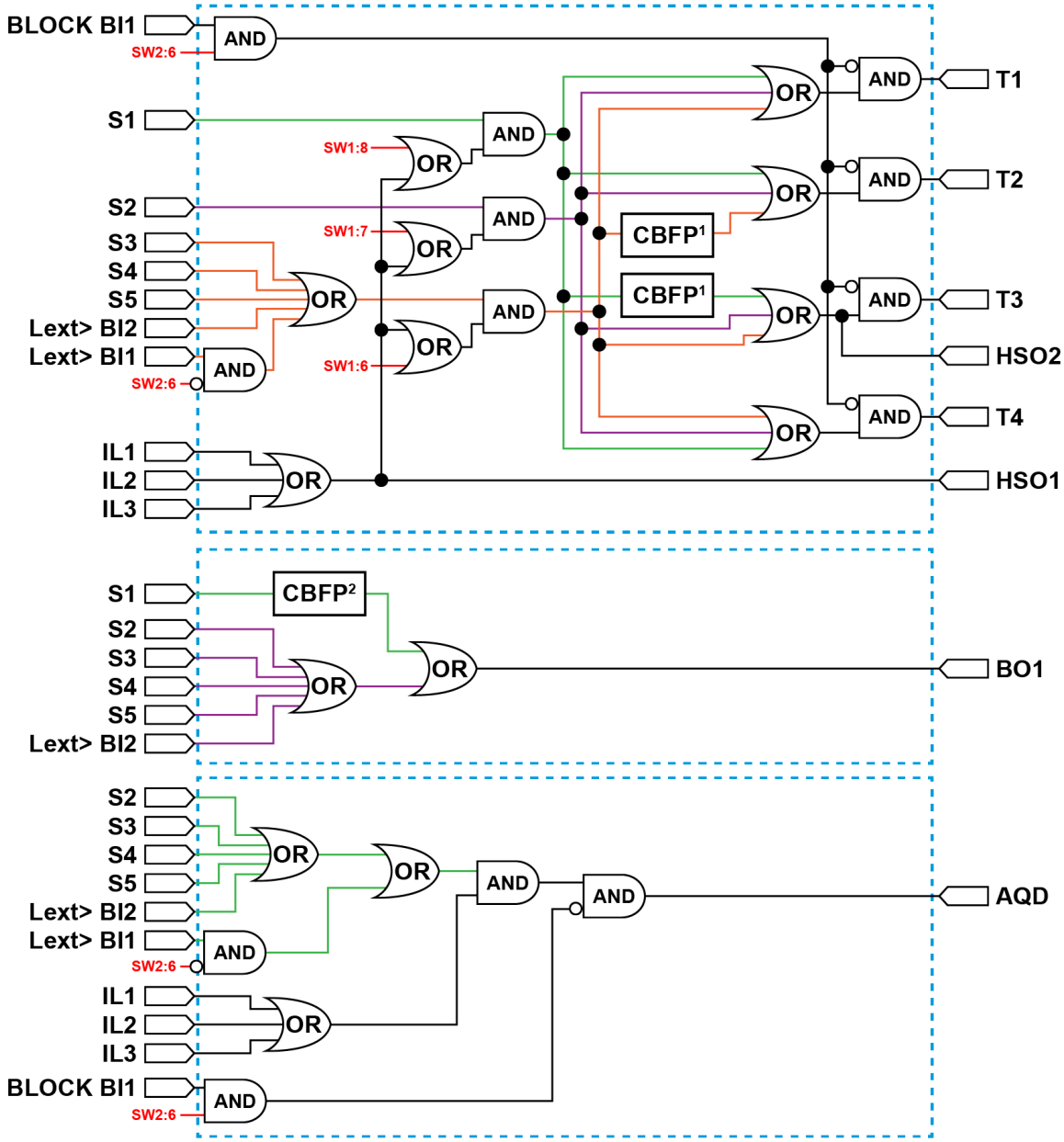

1) CBFP signals are activated instantly if SW2/4 is set to FAST position, delayed if DIP-switch 2/4 is set to CBFP-position. SW2/3 can be used for choosing 100 ms or 150 ms delay time.
2) If SW2/4 is set to CBFP position, DIP-switch must be set to light only mode or overcurrent signal (I>) to be active for output activation to occur. If SW2/4 is set to FAST position, no current signal is required.

SS:1b

Figure. 7.2.2 - 29. The trip logic matrix of SS:1b.

SS:1b		OUTPUTS							
		T1[1]	T2[1]	T3[1]	T4[1]	BO1	HSO1	HSO2	AQD[1]
INPUTS	S1	x[2]	x[2]	CBFP[2]	x[2]			CBFP[2]	
	S2	x[2]	x[2]	x[2]	x[2]			x[2]	x[3]
	S3	x[2]	CBFP[2]	x[2]	x[2]			x[2]	x[3]
	S4 & S5	x[2]	CBFP[2]	x[2]	x[2]			x[2]	x[3]
	Lext> AQ-101 (BI2)	x[2]	CBFP[2]	x[2]	x[2]			x[2]	x[3]
	Iext> AQ-110 (BI1)						x		
	I> overcurrent					x	x		

1) If SW2/6 is ON, activation is blocked if BI1 is active.
2) Activates only if DIP-switch has been set to light only mode or if overcurrent signal (I>) is ON.
3) Activates only if overcurrent signal (I>) is ON.

CBFP signals are activated instantly if SW2/4 is set to FAST position, delayed if DIP-switch 2/4 is set to CBFP-position. SW2/3 can be used for choosing 100 ms or 150 ms delay time.

Figure. 7.2.2 - 30. Simplified logic diagram of SS:1b.

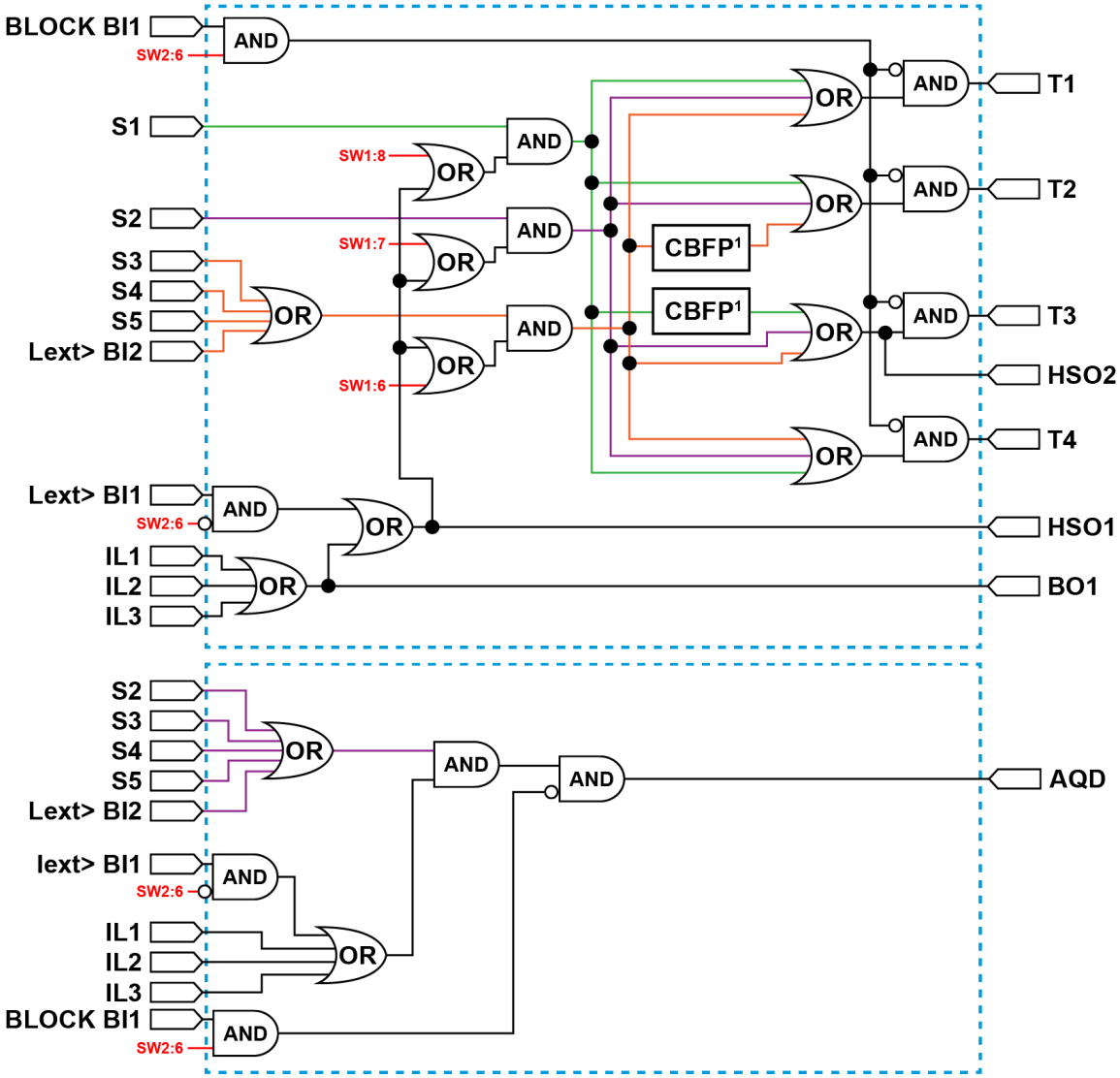

1) CBFP signals are activated instantly if SW2/4 is set to FAST position, delayed if DIP-switch 2/4 is set to CBFP-position. SW2/3 can be used for choosing 100 ms or 150 ms delay time.

SS:2a

Figure. 7.2.2 - 31. The trip logic matrix of SS:2a.

SS:2a		OUTPUTS							
		T1[1]	T2[1]	T3[1]	T4[1]	BO1	HSO1	HSO2	AQD[1]
INPUTS	S1	x[2]	x[2]	x[2]	x[3]	CBFP[4]		CBFP[2]	x[3]
	S2	x[2]	x[2]	x[2]	x[2]	x		x[2]	x[2]
	S3	x[2]	CBFP[2]	x[3]	x[2]	x		x[2]	x[2]
	S4 & S5	x[2]	CBFP[2]	x[3]	x[2]	x		x[2]	x[2]
	Lext> AQ-110 (BI1)	x[2]	CBFP[2]	x[3]	x[2]			x[2]	x[2]
	Lext> AQ-101 (BI2)	x[2]	CBFP[2]	x[3]	x[2]	x		x[2]	x[2]
	I> overcurrent						x		

1) If SW2/6 is ON, activation is blocked if BI1 is active.
2) Activates only if DIP-switch has been set to light only mode or if overcurrent signal (I>) is ON.
3) Activates only if DIP-switch has been set to light only mode or if overcurrent signal (I>) is ON. No activation if SW2/4 is set to CBFP position
4) If SW2/4 is set to CBFP position, DIP-switch must be set to light only mode or any overcurrent signal (I>) to be active for output activation to occur. If SW2/4 is set to FAST position, no current signal is required.

CBFP signals are activated instantly if SW2/4 is set to FAST position, delayed if DIP-switch 2/4 is set to CBFP-position. SW2/3 can be used for choosing 100 ms or 150 ms delay time.

Figure. 7.2.2 - 32. Simplified logic diagram of SS:2a.

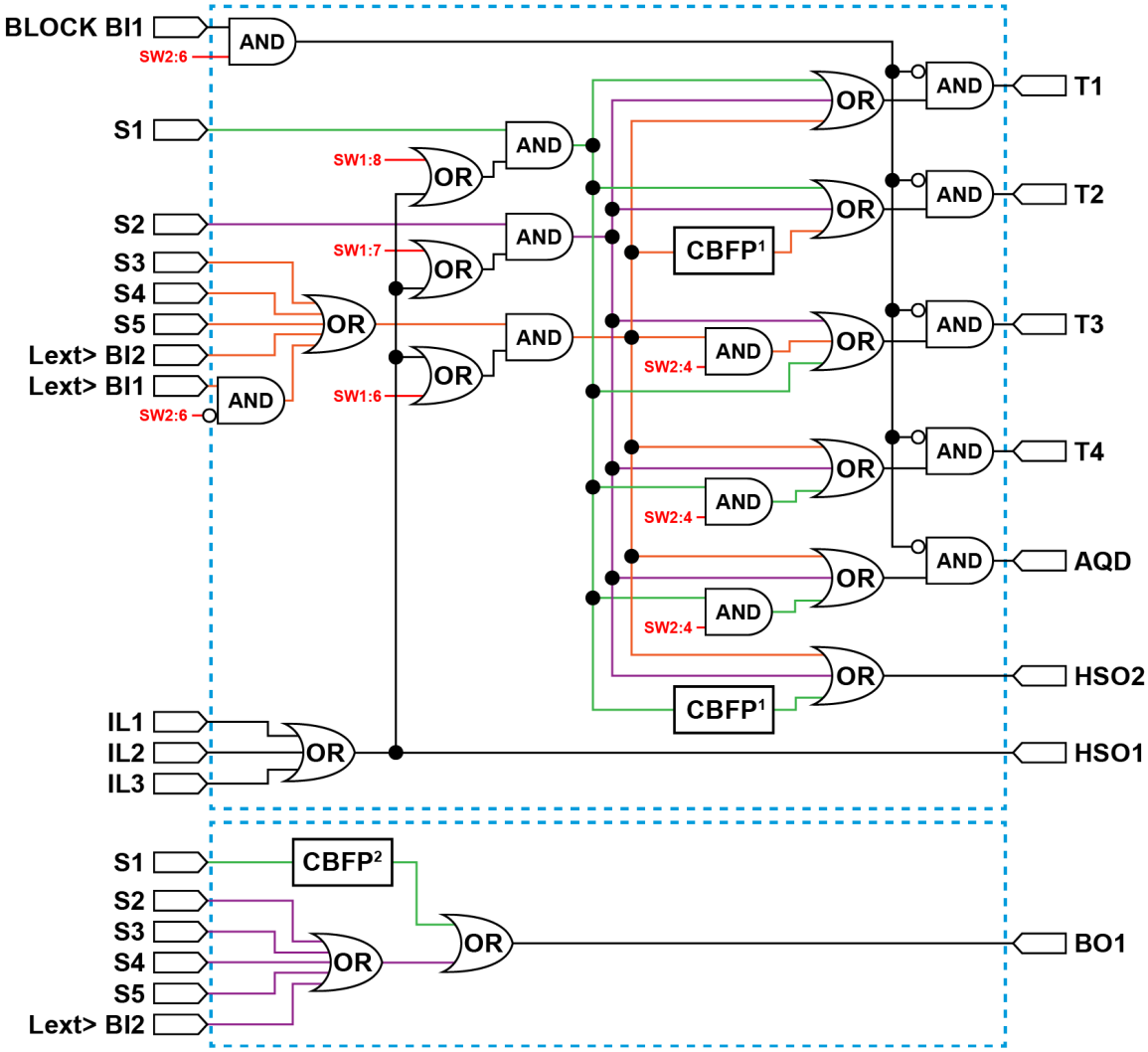

1) CBFP signals are activated instantly if SW2/4 is set to FAST position, delayed if DIP-switch 2/4 is set to CBFP-position. SW2/3 can be used for choosing 100 ms or 150 ms delay time.
2) If SW2/4 is set to CBFP position, DIP-switch must be set to light only mode or overcurrent signal (I>) to be active for output activation to occur. If SW2/4 is set to FAST position, no current signal is required.

SS:2b

Figure. 7.2.2 - 33. The trip logic matrix of SS:2b.

SS:2b		OUTPUTS							
		T1[1]	T2[1]	T3[1]	T4[1]	BO1	HSO1	HSO2	AQD[1]
INPUTS	S1	x[2]	x[2]	x[2]	x[3]			CBFP[2]	x[3]
	S2	x[2]	x[2]	x[2]	x[2]			x[2]	x[2]
	S3	x[2]	CBFP[2]	x[3]	x[2]			x[2]	x[2]
	S4 & S5	x[2]	CBFP[2]	x[3]	x[2]			x[2]	x[2]
	Lext> AQ-101 (BI2)	x[2]	CBFP[2]	x[3]	x[2]			x[2]	x[2]
	Iext> AQ-110 (BI1)						x		
	I> overcurrent					x	x		

1) If SW2/6 is ON, activation is blocked if BI1 is active.
2) Activates only if DIP-switch has been set to light only mode or if overcurrent signal (I>) is ON.
3) Activates only if DIP-switch has been set to light only mode or if overcurrent signal (I>) is ON. No activation if SW2/4 is set to CBFP position.

CBFP signals are activated instantly if SW2/4 is set to FAST position, delayed if DIP-switch 2/4 is set to CBFP-position. SW2/3 can be used for choosing 100 ms or 150 ms delay time.

Figure. 7.2.2 - 34. Simplified logic diagram of SS:2a.

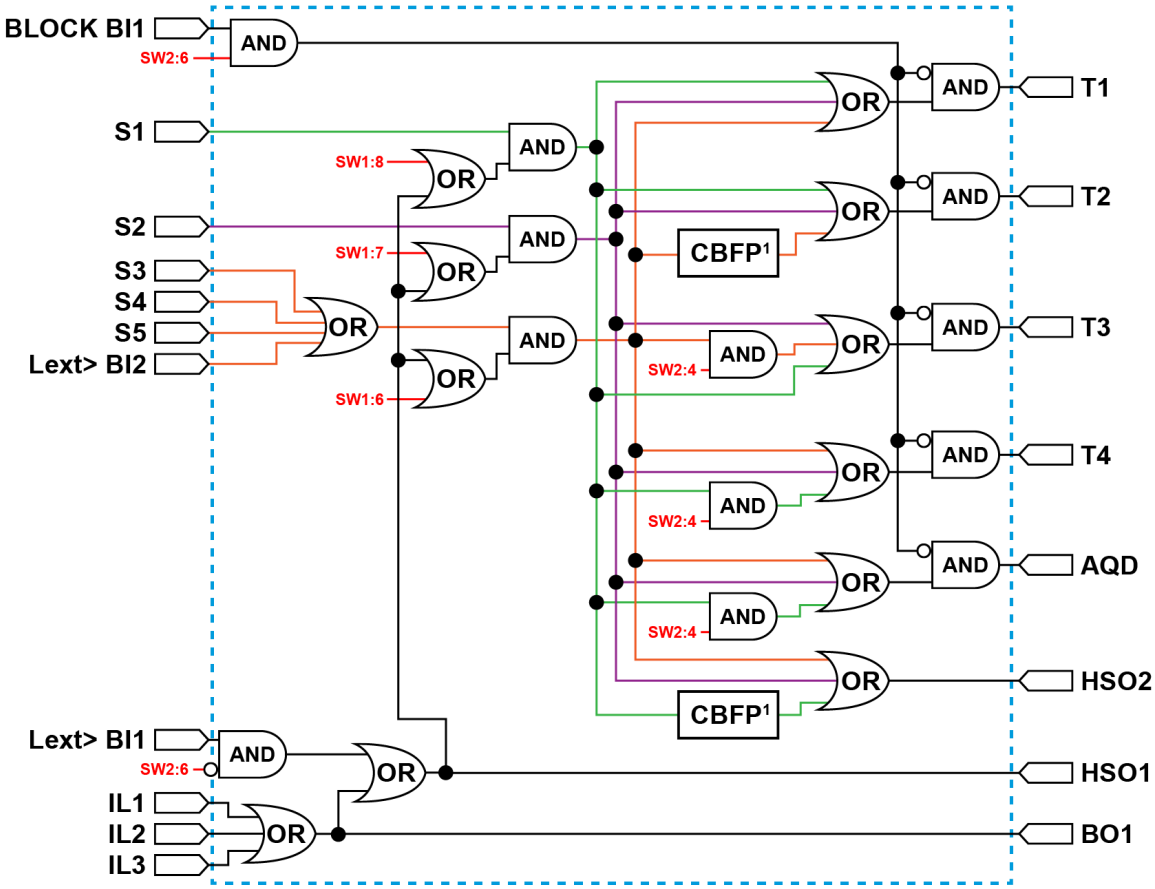

1) CBFP signals are activated instantly if SW2/4 is set to FAST position, delayed if DIP-switch 2/4 is set to CBFP-position. SW2/3 can be used for choosing 100 ms or 150 ms delay time.

7.3 Push button (SET)

The device contains one push button, SET, and it can be used for all operational functions. The push button is used for:

1. Setting up the system (also known as auto-configuration)
2. Resetting the indicator LEDs
3. Resetting latched outputs
4. Checking the input connections

Figure. 7.3 - 35. The "SET" push button on the device's front panel.

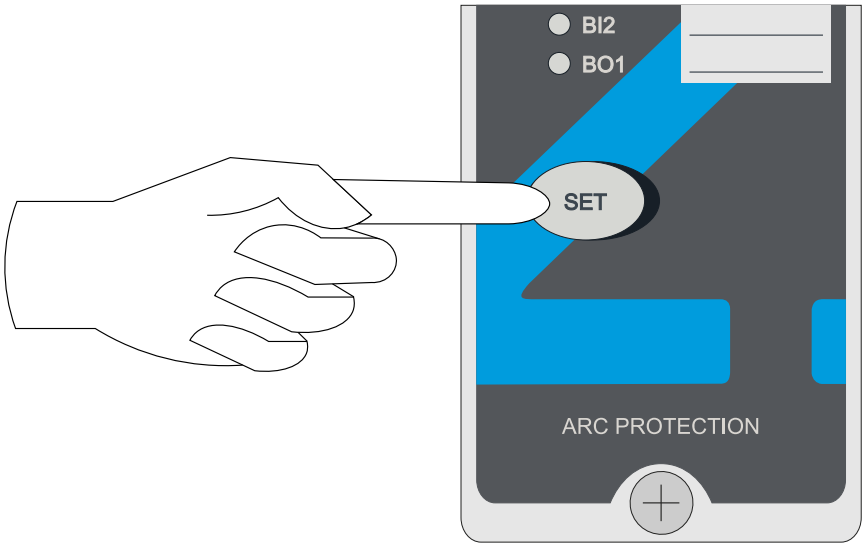

7.3.1 System setup (auto-configuration)

After DIP switches have been set to correct position and all sensors, binary inputs and binary outputs have been connected, a system setup procedure (also known as auto-configuration) must be performed. The sequence is initialized by pressing the SET push button for two seconds. This causes the sensor and binary I/O LEDs to start blinking. The device scans these inputs to see if they are connected; when an input is detected, the corresponding LED lights up to indicate that a connection was found. All inputs that are not connected continue to blink for three more seconds. Then, all LEDs are turned off. Additionally, the DIP switch setting are stored in the non-volatile memory after this sequence.

All arc sensors are operational even when they have not been auto-configured. System setup is only used for self-supervision purposes.

Please note that to reconfigure a device with fewer connections (BI/BO or arc sensors) than in the previously memorized setup, one of the DIP switches must be moved back and forth once before the system setup procedure is carried out. You can reconfigure a device with more connections at any time without having to move one of the DIP switches.

7.3.2 Reset

All LED indications and latched trip relays can be reset by pressing the SET push button.

7.3.3 Input connection check

After the system setup (auto-configuration) procedure is completed, you can verify the connectivity of all sensors and binary input channels by pressing the SET push button three (3) times within two (2) seconds. The LEDs of the corresponding sensors, binary input channels and the “Power” LED start blinking. The LEDs blink as many times as there are connected sensors and binary output channels from other devices.

7.4 Circuit breaker failure protection

The circuit breaker failure protection function is used for detecting a failure to open the breaker when tripping command has been given by the arc protection relay. The CBFP function activates when the arc protection relay detects the presence of fault for a set duration (100 ms or 150 ms). In case of circuit breaker failure the arc protection relay will send a trip signal to the next available breaker. Please note that if the device is set to operate on both arc light and overcurrent, both conditions must persist to activate the CBFP function. The CBFP function can be set to operate either on a 100-ms or a 150-ms delay (please refer to the DIP switch settings chapter for more information). The operation logic of CBFP function depends on the chosen logic scheme (see Scheme selection chapter for more information).

7.5 LED indicator functions

The AQ-110PLV device has nineteen (19) indication LEDs and the AQ-110FLV device has eighteen (18) indication LEDs on the device's front panel.. Apart from the "Power" and "Error" LEDs, the user can write their own identifications for each of the remaining LEDs on the text insert located in the transparent pocket next to the LEDs.

When the device is powered up, it performs an LED test. All LEDs turn on for two (2) seconds and then turn off; only the blue "Power" LED stays on.

When the device operates normally, only the blue "Power" LED is lit.

All current measuring channels (that is, IL1, IL2 and IL3) have their own indication LEDs. When any channel measurement exceeds the set threshold value for longer than 1.5 ms, its corresponding LED turns on. In an open CT condition both the corresponding current channel indicator LED and the "Error" LED are blinking.

If an arc sensor is activated, its corresponding LED turns on. Activated arc sensor LEDs will stay on until user has reset them with "SET" push button.

If there is a loose sensor wire or if the self-supervision function detects a configuration mismatch (that is, a new sensor has been attached but the auto-configuration system setup has not been run), the corresponding LED starts flashing and the "Error" LED activates.

The binary I/O LEDs indicate the status of the input and output lines. If any of the lines become active, the corresponding LED turns on. All light channel and trip indication LEDs are latched, even if the DIP switch settings are in the non-latched mode.

All LED indications are stored in the non-volatile memory (EPROM) to help identify the necessary trip information even after auxiliary power is lost. When the device is re-powered after a power supply loss, the front panel shows the status of all LEDs.

You can clear the LEDs by pushing the SET button.

7.6 LED operations guide

The table below describes the function of each indicator LED in detail. Please note that the S4 and S5 sensor channels are not in use in the AQ-110FLV variant.

Table. 7.6 - 5. LED operations of AQ-110PLV and AQ-110FLV.

LED name (color)	Light off	Steady light	Blinking light	Action if abnormal
POWER (blue)	The auxiliary power supply is disconnected.	The auxiliary power supply is connected.	*(N/A)*	Check the power supply.

LED name (color)	Light off	Steady light	Blinking light	Action if abnormal
ERROR (red)	The system is healthy.	A system failure has occured.	A configuration mismatch has been detected. Protection is partially operational.	Verify the system condition (see the System self-supervision and Troubleshooting chapters).
T1–T4 (red)	Normal status.	The trip relay has activated.	*(N/A)*	Check what caused the trip, clear the fault and reset the indicator LEDs with the push button.
S1–S3 (amber)	Normal status.	Light information has activated the sensor channel.	There is a sensor channel discontinuity or a system setup has not been performed.	Check the sensor continuity or perform a system setup (see the System setup chapter); or, check what activated the sensor.
S4 (amber) NB! Only in AQ-110PLV!	Normal status.	Light information has activated the sensor channel.	There is a sensor channel discontinuity or a system setup has not been performed.	Check the sensor continuity or perform a system setup (see the System setup chapter); or, check what activated the sensor.
S5 (amber) NB! Only in AQ-110PLV!	Normal status.	Light information has activated the fiber sensor channel. Or, if the device has AQD control configured to this fiber channel, an arc flash has activated the channel.	There is a fiber discontinuity or a system setup has not been performed.	Check the sensor continuity or perform a system setup (see the System setup chapter); or, check what activated the sensor.
AQD (amber) NB! Only in AQ-110PLV!	Normal status.	AQD (arc quenching device) has been given a trip signal.	The fiber connection to the AQD (arc quenching device) has dropped off or a system setup has not been performed.	Check the fiber connection and/or the system configuration.
BI1–BI2 (amber)	Normal status.	The binary input has been activated.	The binary input has a loose connection.	Check the binary input wiring.
BO1 (amber)	Normal status.	The binary output has been activated.	*(N/A)*	—
IL1–IL3 (amber)	Normal status (the actual current is below the set threshold).	The measured current is above the set threshold.	There is an open CT connection in the channel.	Check the set current thresholds, or check the CT wiring.
HSO (HSO1) (amber)	Normal status.	The high-speed output has been activated.	*(N/A)*	Check what activated the output, clear the fault and reset the indicator LEDs with the push button.
HST (HSO2) (amber)	Normal status.	The high-speed output has been activated.	*(N/A)*	Check what activated the output, clear the fault and reset the indicator LEDs with the push button.

7.7 Non-volatile memory

All critical system data (such as DIP switch settings and the system setup file) are stored in the non-volatile memory (EPROM) to ensure accurate operation and full self-supervision even if auxiliary power is lost temporarily.

Additionally, all LED indications are stored in the non-volatile memory to provide a quick recovery of the system status indication. This feature is especially important if tripping causes the device to lose its auxiliary power.

The non-volatile memory does not require a power supply to maintain the information and it retains the settings and the indications permanently without power.

8 System self-supervision

AQ 100 series devices have an extensive self-supervision function, including both internal functions and external connections. The self-supervision function monitors the following:

- power supply
- hardware
- software
- binary input connection(s)
- sensor connection(s)
- DIP switch settings
- current transformer supervision

When the device's condition is healthy and is powered on, the "Power" LED is lit and the system failure (SF) relay is energized. If the self-supervision function detects a faulty condition or if the power supply fails, the SF relay is released and the "Error" LED becomes lit.

Point sensor connection monitoring

If a point sensor failure occurs, the device will go into Error mode. The "Error" LED turns on, the SF relay releases, and the LED of the corresponding faulty sensor channel starts blinking. In this situation the device is still operational, although the faulty sensor channel is blocked. If the error is resolved, the device automatically clears the system failure status, energizing the SF relay and turning off the "Error" LED. If one or more of the sensors are disconnected, the healthy sensors remain in use and the device remains operational accordingly. However, the device remains in Error mode until the sensors are connected again.

Fiber loop connection monitoring

Fiber loop channel(s) is monitored by a test light pulse that travels through the loop. If a discontinuity is detected, the "Error" LED turns on, the SF relay releases, and the LED of the corresponding faulty sensor channel starts blinking. If the error is resolved, the device automatically clears the system failure status, energizing the SF relay and turning off the "Error" LED. The device remains in Error mode until the sensors are connected again.

Binary input connection monitoring

During system setup (auto-configuration) AQ 100 series device checks how many AQ 100 device binary outputs have been connected to binary inputs. Each AQ 100 series device binary output constantly sends a short pulse every second which the receiving binary input uses to count the number of connected devices. If any of the binary outputs are disconnected after the system setup, the binary input will detect the mismatch and the device will go into Error mode and the binary input LED will blink. If the error is resolved, the device automatically clears the system failure status, energizing the SF relay and turning off the "Error" LED.

DIP switch setting monitoring

The device goes into Error mode, if a DIP switch setting is changed after the system setup procedure has been performed. However, the configured (stored) settings are still valid and the device is still operational.

Current transformer supervision

In AQ 100 series devices with current measurements the self-supervision function also monitors the three phase current transformer circuit. If the current flow exceeds $0.2 \times I_n$ in any of the phases, the device assumes that the switchgear is energized and the function monitors the phases for an open connection. If at least one of the phases remains above $0.2 \times I_n$ while at least one of the others are at zero, the device issues an open CT alarm: the SF relay is released, the "Error" LED is turned on and the LED of the faulty phase(s) starts blinking.

9 Wiring example

Figure. 9 - 36. Example wiring diagram for AQ-110PLV.

Figure. 9 - 37. Example wiring diagram for AQ-110FLV.

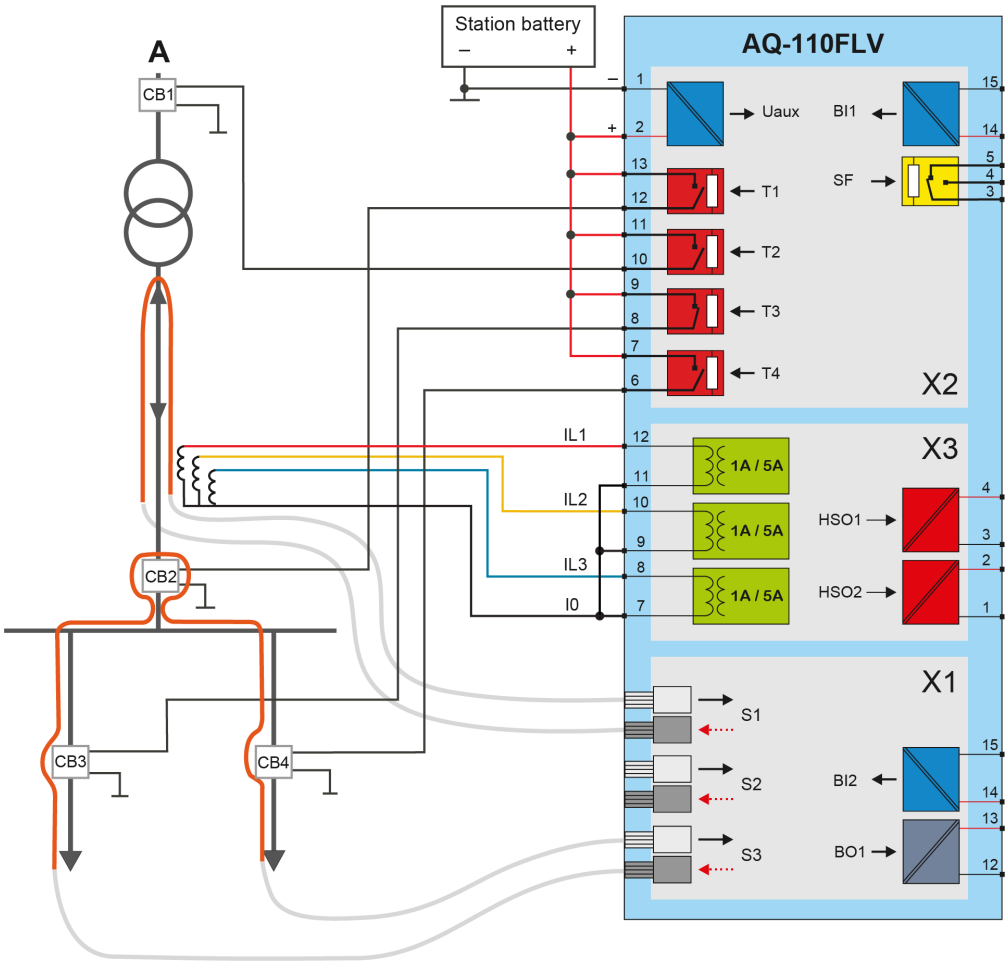

10 Dimensions and installation

AQ-110xLV can be either door-mounted or panel-mounted in a standard 19 inch rack. The device's dimensions (without PCBs) are as follows:

- Height: 157 mm (6.18 in)
- Width: 102 mm (4.02 in)
- Depth: 160 mm (6.30 in).

The figure below presents the dimension of the device visually. It also shows the dimensions of the cut-out (bottom-left) required when mounting the device on a panel. While the image is of the AQ-110F device, the measurements are the same for AQ-110PLV and AQ-110FLV as well. The figure following this one presents how to install an AQ-110xLV device into a cut-out.

Figure. 10 - 38. Dimensions of the device.

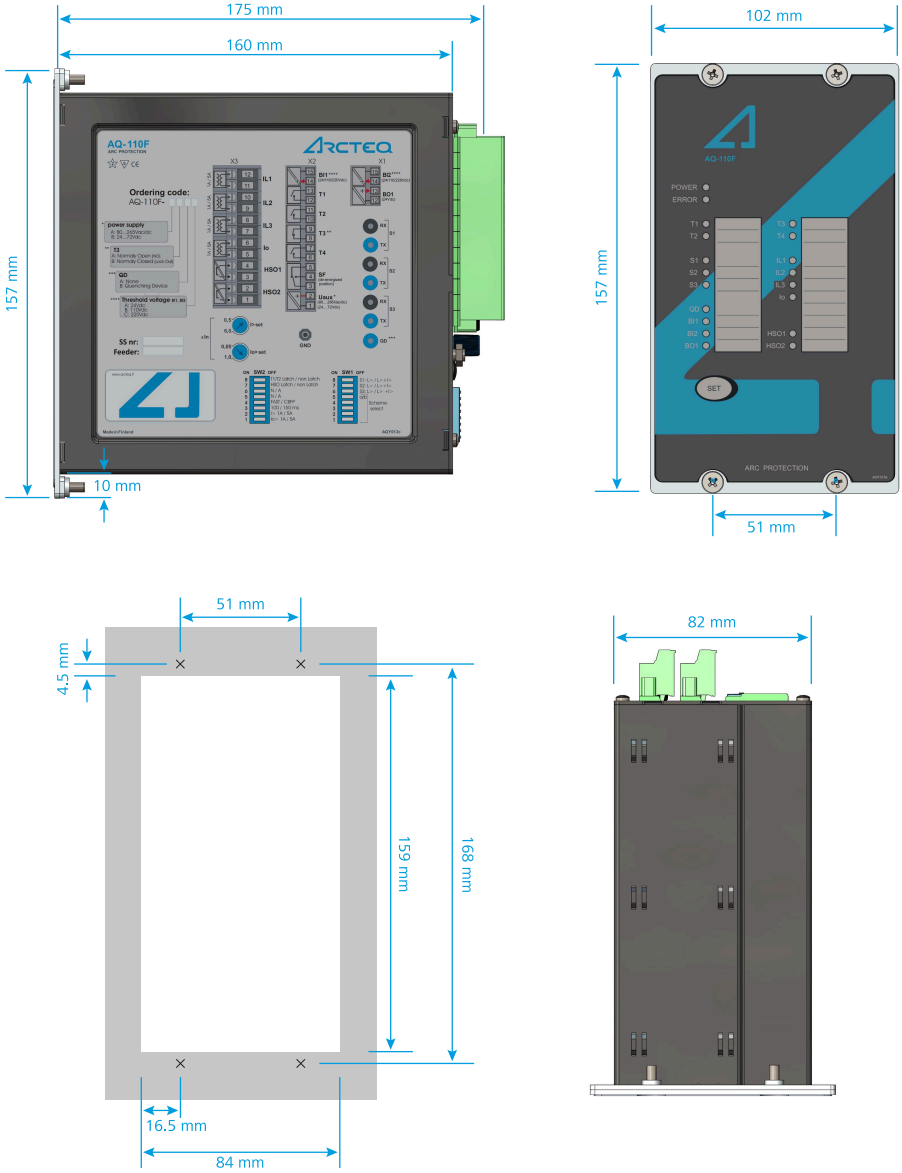

Figure. 10 - 39. Installing a device into a cut-out.

11 Testing

It is recommended that the device is tested prior to substation energizing. Testing is carried out by simulating an arc light for each sensor and verifying that the correct trip contact(s) tripped and that the correct indicator LED(s) turned on.

Any strong camera flash works well to simulate arc light. Please note that small LED lights like smartphone flashes are not strong enough to activate a point sensor or a fiber loop. Having a self-timer helps with the testing process because it can be connected to the test kit. Any strong flashlight works to test non-latched signals and the CBFP function. Before testing please check that the equipment used has a fully charged battery.

11.1 Testing the light-only mode

1. Check that the DIP switch settings are positioned according to your application.
2. Activate the camera flash within 30 cm (12 inches) of the sensor that is being tested.
3. Verify that the indicator LED of the corresponding sensor channel is lit.
4. Verify the activation(s) of the relay output(s) by checking the circuit breaker's status, or by monitoring the trip contact's status. The circuit breaker should open, or the contacts operate. Please note that you achieve the best test results when you operate the circuit breaker while testing.
5. Verify that the indicator LED(s) of the corresponding relay output(s) is lit.
6. If you are using the BO1 binary output and/or one or both of the high-speed outputs, verify their signal activation either through the status change of the relevant input, or by measuring the signal output voltage. Please note that BO1 is of the non-latched type.
7. If you are using the BO1 binary output and/or one or both of the high-speed outputs, also verify that their corresponding LED is lit.
8. Press the SET push button to reset all indications and latches.
9. If you are using the BI2 binary input as the master trip, activate it and verify that the trip has occurred by repeating the steps 4 and 5.
10. Press the SET push button to reset all indications and latches.
11. Repeat the steps 1 through 10 for all sensors.

11.2 Testing the light and current mode

1. Check that the DIP switch settings are positioned according to your application.
2. Activate the following two things simultaneously: the camera flash within 30 cm (12 inches) of the sensor that is being tested, and the binary input used for the overcurrent condition (I>).
3. Verify that the indicator LED of the corresponding sensor channel is lit.
4. Verify that the indicator LED of the binary input is lit.
5. Verify the activation(s) of the relay output(s) by checking the circuit breaker's status, or by monitoring the trip contact's status. The circuit breaker should open, or the contacts operate. Please note that you achieve the best test results when you operate the circuit breaker while testing.
6. Verify that the indicator LED(s) of the corresponding relay output(s) is lit.
7. If you are using the BO1 binary output or a high-speed output (HSO1 and/or HSO2), verify the signal activation either through the status change of the relevant input, or by measuring the signal output voltage.
8. If you are using the BO1 binary output or a high-speed output (HSO1 and/or HSO2), also verify that the corresponding LED is lit. Please note that BO1 is of the non-latched type.
9. Activate the camera flash within 30 cm (12 inches) of the sensor but do not activate the binary input used for the overcurrent condition (I>).
10. Verify that no trip has occured and only the indicator LED of the sensor activation is lit.

11. If you are using the BO1 signal and have configured it to send light information, verify that it is activated.
12. Press the SET push button to reset all indications and latches.
13. If you are using a binary input as the master trip, activate it and verify that the trip has occurred by repeating the steps 5 and 6.
14. Press the SET push button to reset all indications and latches.
15. Repeat the steps 1 through 12 for all sensors.

11.3 Testing the CBFP function

The circuit breaker failure protection (CBFP) function is tested by taking the light signal and the additional trip criterion signal (if applicable) and leaving them active for longer than the set CBFP time (that is, 100 or 150 ms). Check that the correct outputs activated after the set delay time.

11.4 Testing the operation time

An operation time test is not required at commissioning as it is performed by the manufacturer both as a type test and as a routine production test. If you want to have more information of these tests, please refer to the routine test reports sent with the AQ-110 device and/or consult your nearest Arcteq representative for the type test reports.

However, if it is deemed necessary, you can conduct an on-site timing test with the following instructions.

1. Use a calibrated relay test set.
2. Connect one of the test set's outputs to a strong camera flash to initialize the flash and to configure the set's timer to start simultaneously with the flash.
3. Connect one of the AQ-110 device's trip outputs (T1, T2, T3, T4) or high-speed outputs (HSO1, HSO2) to a test set input and configure the input to stop the timer.
4. Place the camera flash within 30 cm (12 inches) of the sensor.
5. Initiate the flash and the timer by using the test set output.
6. Read the measured time between the simulated arc light and the operation of the trip contact.
7. Subtract the digital input delay of the test set from the final measured time (if applicable). For specific test instructions, please consult the manufacturer of the relay test set.

11.5 Test plan example

Basic data	
Date:	
Substation:	
Switchgear:	
Serial number:	

AQ-110xLV

Preconditions		Additional notes
Trip mode (channel 1):	___ L> ___ L> + I>	
Trip mode (channels 2, 3, 4):	___ L> ___ L> + I>	
BI master trip in use:	___ Yes ___ No	
CBFP in use:	___ Yes ___ No	
CBFP time setting:	___ 100 ms ___ 150 ms	

Object activated		LED active	T1, T2, T3, T4 active	BO1 active	Additional notes
Sensor channel 1	S1				
	S2				
	S3				
Sensor channel 2	S1				
	S2				
	S3				
Sensor channel 3	S1				
	S2				
	S3				
Sensor channel 4	S1				
	S2				
	S3				
Fiber sensor channel					
Binary inputs	BI1				
	BI2				
Phase current (IL1, IL2, IL3)					
Residual current (I0)					

Involved personnel	
Tested by:	
Approved by:	

12 Troubleshooting

Table. 12 - 6. Troubleshooting guide for AQ-110x variants.

Problem	Possible solution(s)
The sensor does not activate during testing.	Check the sensor's cable wiring. or Check the testing equipment, especially the camera flash intensity (see the Testing chapter for more information).
The trip relay does not operate even when the sensor is activated.	Tripping might require overcurrent signal simultaneously with light signal. Check the DIP switch settings (see the DIP switch settings chapter for more information).
The current measurement's indicator LED is continuously lit.	Check the set current threshold (see the Current threshold settings chapter for more information).
The current measurement's indicator LED is blinking.	Check that the connections of the three phase currents are correct (see the System self-supervision for more information).

13 Technical data

13.1 Operating times

Table. 13.1 - 7. Technical data for relay operating times.

Trip time using HSO	2 ms*
Trip time using mechanical trip relays	7 ms*
Reset time: - light stage - overcurrent stage	 1 ms 50 ms

*) The total trip time when using both the arc light (L>) or phase/residual overcurrent (I>) from this device and the arc light (L>) from an AQ-101 variant or an AQ-102 device.

13.2 Auxiliary voltage

Table. 13.2 - 8. Technical data for the relay auxiliary voltage (Uaux).

Auxiliary power supply	92…265 V AC/DC 18…72 V DC (optional)
Maximum power consumption	5 W, < 10 mΩ
Standby current	90 mA
Start-up inrush current	<150 ms (110 V DC) <600 ms (24 V DC)

13.3 Binary inputs

Table. 13.3 - 9. Technical data for the binary inputs (BI1, BI2).

Nominal threshold voltage	24 V DC
Threshold: - pick-up - drip-off	 Approximately 16 V DC Approximately 15 V DC
Rated current	3 mA
Number of inputs	2

13.4 Trip relays

Table. 13.4 - 10. Technical data for the trip relays (T1, T2, T3, T4).

Number of trip relays	4 NO <u>or</u> 3 NO + 1 NC
Voltage withstand	250 V AC/DC
Carry: - continuous carry - make-and-carry for 3 s - make-and-carry for 0.5 s	 5 A 16 A 30 A
Breaking capacity DC*	40 W (0.36 A at 110 V DC)
Contact material	AgNi 90/10

*) When the time constant L/R = 40 ms.

13.5 High-speed output(s)

Table. 13.5 - 11. Technical data for the high-speed outputs (HSO, HST).

Number of outputs	2
Rated voltage	250 V DC
Carry: - continuous carry - make-and-carry for 3 s - make-and-carry for 0.5 s	 2 A 6 A 15 A
Breaking capacity DC*	1 A/110 W
Contact material	Semiconductor

*) When the time constant L/R = 40 ms.

13.6 Binary output(s)

Table. 13.6 - 12. Technical data for the binary output (BO1).

Number of outputs	1
Rated voltage	+24 V DC (internal power supply)
Rated current (max.)	20 mA

13.7 System failure relay

Table. 13.7 - 13. Technical data for the system failure relay (SF).

Number of SF relays	1
Rated voltage	250 V AC/DC
Carry: - continuous carry - make-and-carry for 3 s - make-and-carry for 0.5 s	 5 A 16 A 30 A
Breaking capacity DC*	40 W (0.36 A at 110 V DC)
Contact material	AgNi 90/10

*) When the time constant L/R = 40 ms.

13.8 Point sensors

AQ-01 point sensor

Table. 13.8 - 14. Technical data for the AQ-01 light point sensor.

Light intensity threshold	8,000 lux 25,000 lux 50,000 lux
Detection radius	180º
Mechanical protection	IP 20
Sensor cable specification	Shielded twisted pair 0.75 mm^2 (AWG: 18)
Maximum sensor cable length (per channel)	200 m

Operating temperature	–20…+85 ºC

AQ-02 point sensor

Table. 13.8 - 15. Technical data for the AQ-02 light and pressure point sensor.

Light intensity threshold	8,000 lux 25,000 lux 50,000 lux
Pressure threshold (fixed)	0.2 bar above ambient pressure
Pressure measuring accuracy	±1.8 % (of full scale)
Detection radius	180º
Mechanical protection	IP 20
Sensor cable specification	Shielded twisted pair 0.75 mm^2 (AWG: 18)
Maximum sensor cable length (per channel)	200 m
Operating temperature	–20…+85 ºC

13.9 Fiber optic loop sensors

AQ-06 fiber optic loop sensor

Table. 13.9 - 16. Technical data for the AQ-06 fiber optic loop sensor.

Material	Plastic fiber
Light intensity threshold	8,000 lux
Cable length (min…max)	3…40 m
Cable diameter	1.0 mm
Detection radius	360º
Bending radius	5 cm
Operating temperature	–40…+85 ºC

AQ-07 fiber optic loop sensor

Table. 13.9 - 17. Technical data for the AQ-07 fiber optic loop sensor.

Material	Covered glass fiber
Light intensity threshold	8,000 lux
Cable length (min…max)	3…50 m
Cable diameter	1.2 mm
Detection radius	360º
Bending radius	1 cm
Operating temperature	–40…+85 ºC

AQ-08 fiber optic loop sensor

Table. 13.9 - 18. Technical data for the AQ-08 fiber optic loop sensor.

Material	Covered glass fiber
Light intensity threshold	8,000 lux
Cable length (min…max)	3…15 m
Cable diameter	1.2 mm
Detection radius	360º
Bending radius	1 cm
Operating temperature	–40…+125 ºC

13.10 Disturbance tests

Table. 13.10 - 19. Technical data for the disturbance tests.

Electromagnetic compatibility test	CE-approved and tested according to EN 50081-2 and EN 50082-2
Conducted emission (EN 55011, class A)	0.15…30.00 Hz
Radiated emission (EN 55011, class A)	30.00…1,000.00 MHz
Electrostatic discharge immunity (IEC 244-222 and EN 61000-4-2, level 4)	Air discharge: 15 kV Contact discharge: 8 kV
Electrical fast transients (EN 61000-4-4, class III & IEC 801-4, level 4)	Power supply input: 4 kV, 5/50 ns Other inputs and outputs: 4 kV, 5/50 ns
Surge immunity (EN 61000-4-5, level 4)	Between wires: 2 kV, 1.2/50 µs Between wire and earth: 4 kV, 1.2/50 µs
RF electromagnetic field (EN 61000-4-3, level 3)	f = 80…1,000 MHz, 10 V/m
Conducted RF field (EN 61000-4-6, level 3)	f = 150 kHz…80 MHz, 10 V/m

13.11 Voltage tests

Table. 13.11 - 20. Technical data for the voltage tests.

Insulation test voltage (IEC 60255-5)	2 kV, 50 Hz, 1 min
Impulse test voltage (IEC 60255-5)	5 kV, 1.2/50 µs, 0.5 J

13.12 Mechanical tests

Table. 13.12 - 21. Technical data for the mechanical tests.

Vibration test	2…13.2 Hz (± 3.5 mm) 13.2…100 Hz (±1.0 g)
Shock/bump test (IEC 60255-21-2)	20 g and 1,000 bumps/dir.

13.13 Environmental conditions

Table. 13.13 - 22. Technical data for the environmental conditions.

Specified ambient service temperature	–35…+70 ºC
Transportation and storage temperature	–40…+70 ºC
Relative humidity	Up to 97 %
Altitude	Up to 2,000 m above sea level

13.14 Casing

Table. 13.14 - 23. Technical data for the device casing.

Protection: - front - back	 IP 52 IP 20
Device dimensions (W × H × D)	102 × 177 × 161 mm
Weight	1.2 kg

14 Ordering information

AQ-110xLV current measurement and arc sensing device

AQ - 1 1 0 X LV - X X X A

Unit type

P Point sensor unit
F Fiber sensor unit

Auxiliary power supply

A 92...265 V AC/DC
B 18...72 V DC

T3 trip relay setting

A Normally open (NO)
B Normally closed (NC), or Electronic lock-out

Additional channel options

A None
B Fiber optic sensor channel **(110P)** / AQD control **(110 P & 110F)**
C Low fiber input sensitivity **(110F)**

Binary input threshold voltage

A 24 V DC

AQ-0x point sensors

AQ - 0 X X

Sensor function

1 Light point sensor
2 Light and pressure point sensor

Light activation level

A 8,000 lx
B 25,000 lx
C 50,000 lx

AQ-0x fiber optic loop sensors

AQ - 0 X - X - X - X

Sensor function

6 Plastic fiber optic loop sensor
7 Glass fiber optic loop sensor
8 Glass fiber optic loop sensor (high temperature)

Cable length

(see the available options in the "Arc sensors" chapter of this manual)

End 1 covering length (AQ-07 only!)

0 None
1 1 meter
2 2 meters
(for other lengths please consult Arcteq sales at sales@arcteq.fi)

End 2 covering length (AQ-07 only!)

0 None
1 1 meter
2 2 meters
(for other lengths please consult Arcteq sales at sales@arcteq.fi)

Accessories

Order code	Description	Note	Manufacturer
AQX006	Wall mounting bracket	For AQ-103 and AQ-110x variants (MV and LV).	Arcteq Ltd.
AQX016	Wall mounting bracket	For AQ-101, AQ-101S and AQ-102 devices (MV and LV).	Arcteq Ltd.

15 Contact and reference information

Manufacturer

Arcteq Relays Ltd.

Visiting and postal address

Kvartsikatu 2 A 1

65300 Vaasa, Finland

Contacts

Phone:	+358 10 3221 370
Website:	arcteq.fi
Technical support:	support.arcteq.fi
	+358 10 3221 388 (EET 9:00 – 17.00)
E-mail (sales):	sales@arcteq.fi